ELEPHANT BRAKES
BY RIETSCHOTEN

INDUSTRIAL DISC BRAKES
Catalogue

Elephant Brakes by Rietschoten

Strong like an elephant. Smart like an elephant.

Wherever industrial motion needs braking, Elephant Brakes have been reliably at work for over 50 years. Since 1972, our work has focused solely on braking systems. Thanks to the modular construction of our systems and a wellplanned modular design system, braking solutions are possible for practically every demand. Our disc brakes are manufactured in the highest quality according to the standards of a DIN EN ISO 9001-certified quality assurance system. Elephant Brakes are distinguished by their compact size, quick response time, high reliability and outstanding braking power.

Contact

If you are not sure which department is the right one,
feel free to contact the following number:
Phone: +49 (0) 511 37207-0

Quotes, price information:
+49 (0)511-37207 -10

Technical service, sales, maintenance:
+49 (0)511-37207 -57

Order processing:
+49 (0)511-37207 -56

Purchasing:
+49 (0)511-37207 -59

Marketing, technical documentation:
+49 (0)511-37207-27

Further contact details:
Fax: +49 (0) 511 3 72 07 - 77
Web: www.elephantbrakes.com
E-mail: contact@elephantbrakes.com

© 2018
Subject to change without notice. 4. edition 2023
Deutsche van Rietschoten & Houwens GmbH
Siemensstrasse 47 • 25462 Rellingen• Germany

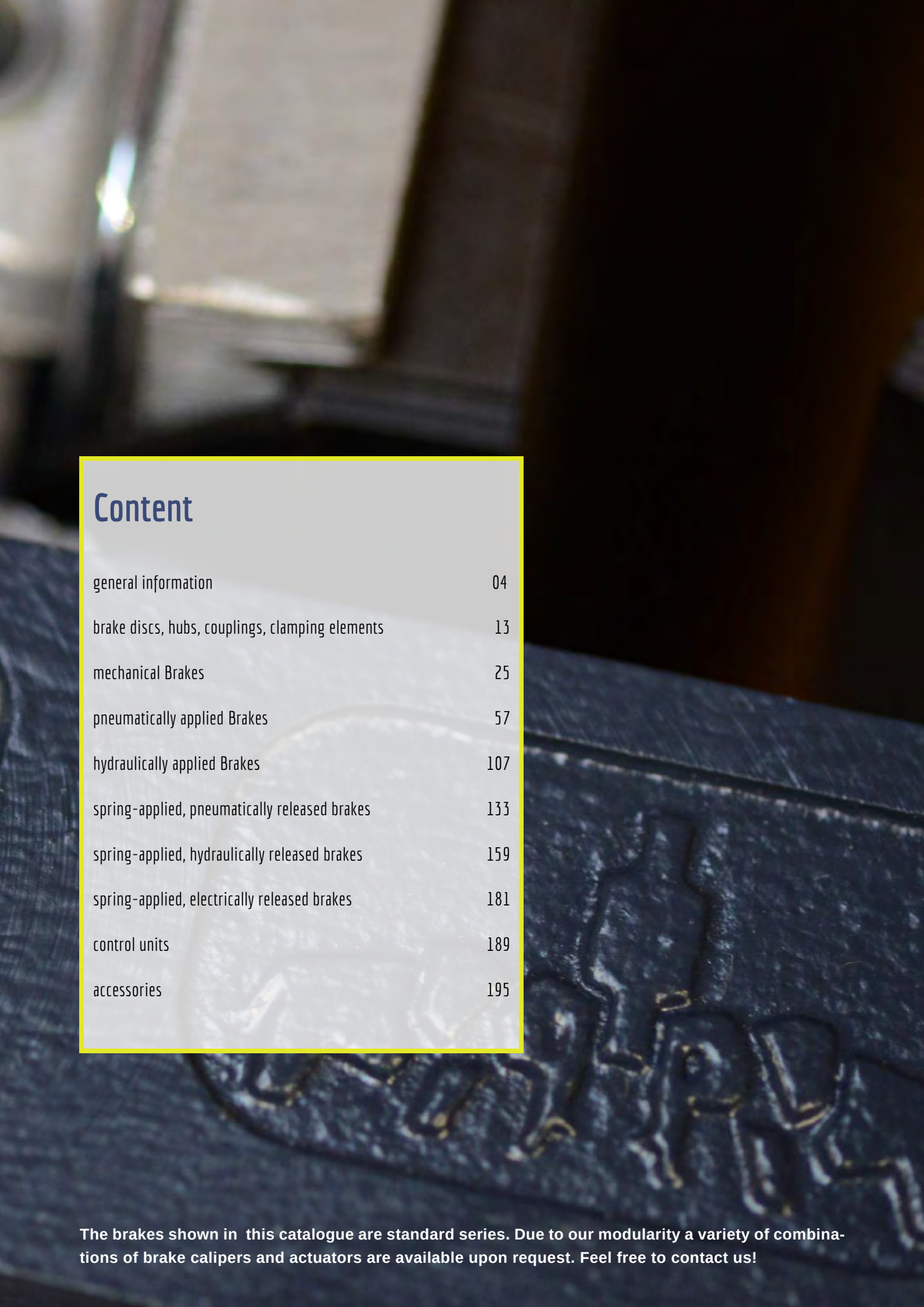

Content

general information	04
brake discs, hubs, couplings, clamping elements	13
mechanical Brakes	25
pneumatically applied Brakes	57
hydraulically applied Brakes	107
spring-applied, pneumatically released brakes	133
spring-applied, hydraulically released brakes	159
spring-applied, electrically released brakes	181
control units	189
accessories	195

The brakes shown in this catalogue are standard series. Due to our modularity a variety of combinations of brake calipers and actuators are available upon request. Feel free to contact us!

ELEPHANT BRAKES BY RIETSCHOTEN

Overview

of our modular design system

CALIPER	ACTUATOR
R&H 050 R&H 051	098 100 402 102 103
R&H 100	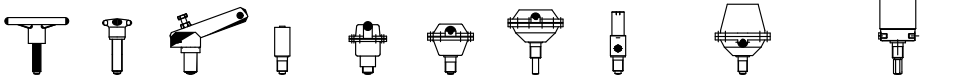 096 098 099 101 102 103 105 250 405 / 406 550 / 560
R&H 200	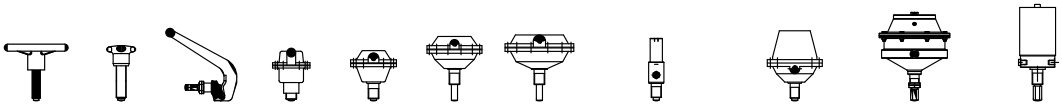 096 098 099 102 103 105 107 250 / 251 405 / 406 412 550 / 552
R&H 250	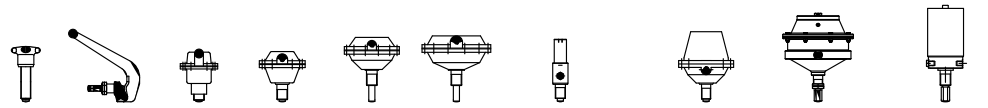 098 099 102 103 105 107 250 / 251 405 / 406 412 550 / 552
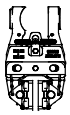 R&H 215-245	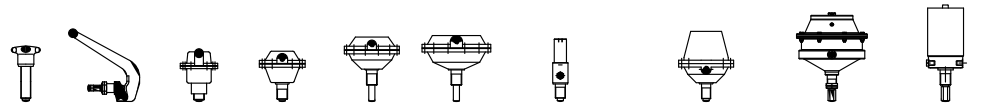 098 099 102 103 105 107 250 / 251 405 / 406 412 550 / 552
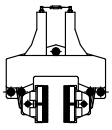 R&H 300	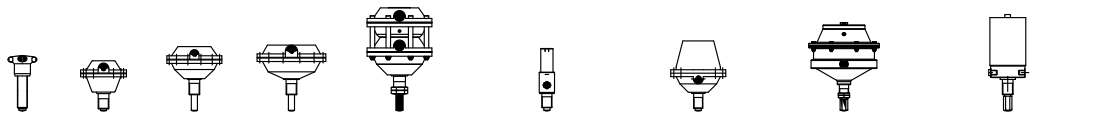 098 103 105 107 106 / 108 250 / 251 405 / 406 412 550 / 552 / 563
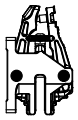 R&H 350	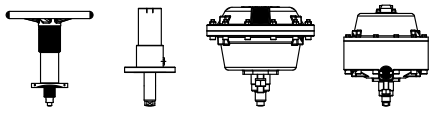 090 204 / 205 135 435

ATEX is the name commonly given to the framework for controlling explosive atmospheres and the standards of equipment, also for non-electronic components like menchanical friction brakes, and protective systems used in them. It is based on the requirements of the European Directive 2014/34/EU.

A product is subject to the ATEX guideline during:

- usage in explosive atmosphere under atmospheric conditions (temperatures of -20°C to 60°C and pressures of 0,8 to 1,1 bar)
- generation, transmission, storage, transformation of energy
- existing, active ignition source on device itself

Employers must classify areas where hazardous explosive atmospheres may occur into zones. A typical explosive atmosphere is a mixture of dangerous substances with air in the form of gases, vapors, mist or dust in which, after ignition has occured, combustion spreads to the entire unburned mixture.

For application emergency braking, web-tension and holding duty

Classification of the brake system acc.:
EX II 2 D/G c T1...T6
Cat. 2 D/G zone 21 or 1

Compared to devices that generate a defined operating temperature, the category of a mechanical friction brake depends on the application parameters (T1...T6). ATEX conformity is only confirmed by the use of friction material T544 in conjunction with disc material EN-GJS-400-15.

Depending on the application, our brake calipers are equipped with a special monitoring unit and, if necessary, a switching amplifier that allows the brake lever position to be monitored. The switching amplifier must be installed in the safe area. In addition, a signal wire in loop construction is inserted in the brake pads. This signal is also integrated in the swtiching amplifier. For defined brake lever alignment, depending on the mounting position, the brake calipers are fitted with an additional inclined mounting kit.

area classification / devices, protection systems			
	permanent, long periods of time, frequent	occasionally normal operation	not or momentary normal operation
gases, vapors, mist	**Zone 0 • Cat. 1 G** previous requirement for zone 0	**Zone 1 • Cat. 1 / 2 G** previous requirement for zone 0, 1	**Zone 2 • Cat. 1 / 2 / 3 G** previus requirement for zone 0, 1, 2
dust	**Zone 20 • Cat. 1 D** previous requirement for zone 10	**Zone 21 • Cat. 1 / 2 D** previous requirement for zone 10	**Zone 22 • Cat. 1 / 2 / 3 D** previous requirement for zone 10, 11

source: TÜV Saarland

1. SELECTION PROCEDURES FOR INDUSTRIAL DISC BRAKES

The Elephant Brakes modular system with its finely graduated brake disc diameters and brake caliper sizes makes it possible to optimally match the individual elements and adapt them to the required operating conditions such as power and braking torque.

Please note that the following calculation bases serve the roughly design of a brake system and can not take into account all the factors required for the design.

Please let us know the technical data relevant to your application using the „Data sheet for disc brake design“ (see page 12). On the basis of this application-specific data, we will make an optimal design of the brake system for you and make you a non-binding offer.

1.1 Used formula symbols

T_{Br}	braking torque [Nm]
$T_{Br\ req.}$	required braking torque [Nm]
T_{mot}	motor torque [Nm]
W_{Br}	friction work of the brake [kJ]
P_{mot}	motor power [kW]
P_{Br}	braking power [kW]
$P_{Br\ d}$	recommended max. braking power acc. to diagram [kW]
P_{C}	continuous slip braking power [kW]
P_{Cd}	recommended max. braking power per brake caliper with continuous slip acc. to diagram [kW]
P_{Cc}	recommended max. braking power per brake caliper, continuous slip brake [kW]
N	trailing [rotation]
n	rotational speed [min-1]
ω	angular frequency [sec-1]
t_{Br}	braking time [s]
m	mass [kg]

r	inner radius [m]
R	outer radius [m]
h	height [m]
D	diameter big [m]
d	diameter small [m]
D_s	outer diameter of brake disc [m]
J	mass moment of inertia [kgm²]
J_R	reduced mass moment of inertia [kgm²]
v	haul-off speed, circumferential speed [m/s]
a_v	acceleration (decelerated) [m/s²]
Z	tension at unwinder [N]
$F_{Br\ req.}$	required braking force at rail [N]
$F_{Br.}$	braking force [N]
s	stopping distance [m]
ρ	density [kg/m³]

2. MOTOR BRAKE

If it does not depend on an exact braking time and if large switching frequencies are not to be expected (switching frequency <10 stops / h), then the braking torque can be simplified with 1,5 to 2,5 times of the rated motor torque.

2.1

$$T_{mot.} = \frac{P_{mot.} \cdot 9550}{n}$$

$$\| T_{Br\ req.} = 1{,}5 - 2{,}5\ T_{mot.} \|$$

2.2 Rough calculation

$$\left\| T_{Br\ req.} = \frac{P_{mot.}}{n} \cdot 20.000 \right\|$$

3.0 STOP BRAKE FOR ROTATING MASSES

3.1 Rotating masses

3.1.1

$$\left\| T_{Br\ req.} = \frac{\sum J \cdot \Delta\omega}{t_{Br}} = \frac{\sum J \cdot \Delta n}{9{,}55 \cdot t_{Br}} \right\|$$

$\Delta\omega = \omega_1 - \omega_2$ **for stop brake** $\omega_2 = 0$

$\Delta n = n_1 - n_2$ $n_2 = 0$

3.1.2

$$t_{Br} = \frac{\sum J \cdot \Delta\omega}{T_{Br}} = \frac{\sum J \cdot \Delta n}{9{,}55 \cdot T_{Br}}$$

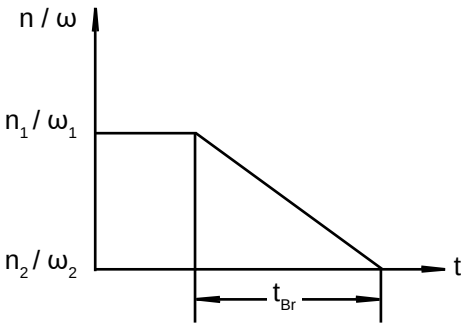

3.1.3 Trailing N

$$N = \frac{\Delta n}{2} \cdot \frac{t_{Br}}{60}$$

3.2 Calculation of the mass moment of inertia

$$J = \frac{GD^2}{4}$$ GD² = centrifugal moment [kp m²]

3.2.1 Plain cylinder

$$J_x = \frac{1}{2} mr^2 = \frac{1}{4} \rho\pi\ r^4 \cdot h$$

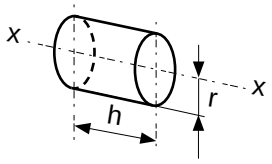

3.2.2 Hollow cylinder

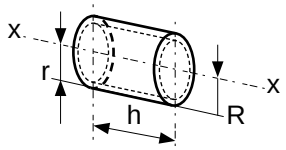

$$J_x = \frac{1}{2} m \left(R^2 + r^2\right) = \frac{1}{2} \rho \cdot \pi\, h \left(R^4 - r^4\right)$$

3.2.3 Ring

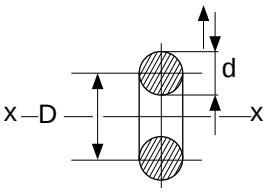

$$J_x = 0{,}25m \left(D^2 + 0{,}75d^2\right) = 0{,}0625\, \rho\pi^2 D d^2 \left(D^2 + 0{,}75d^2\right)$$

3.2.4 Mass reduction (gear)

$$J_R = \left[J_1 + J_2 \left(\frac{\omega_2}{\omega_1}\right)^2 + J_3 \left(\frac{\omega_3}{\omega_1}\right)^2 \cdots J_n \left(\frac{\omega_n}{\omega_1}\right)^2\right]$$

4.0 TRANSLATIONALLY MOVING MASSES

4.1 Vehicles (braking at the wheel shaft)

Calculation of the mass moment of inertia J generated by the linearly moved mass.

4.1.1

$$J = m \cdot \frac{v^2}{\omega^2} = m \cdot \frac{v^2}{n^2} \cdot 91{,}19$$

$T_{Br\ req.}$ < transferable moment between wheel and ground or between wheel and rail!

4.2 Braking of linearly moving masses

Brake on the rail instead of the brake disc

4.2.1

$$\left\| F_{Br\ req.} = m \cdot a_v \right\|$$

4.2.2

$$a_v = \frac{v}{t_{Br}} = \frac{2s}{t_{Br}^2} = \frac{v^2}{2s}$$

4.2.3

$$S = \frac{v \cdot t_{Br}}{2} = \frac{a_v \cdot t_{Br}^2}{2} = \frac{v^2}{2a_v}$$

4.2.4

$$t_{Br} = \sqrt{\frac{2s}{a_v}} = \frac{v}{a_v} = \frac{2s}{v}$$

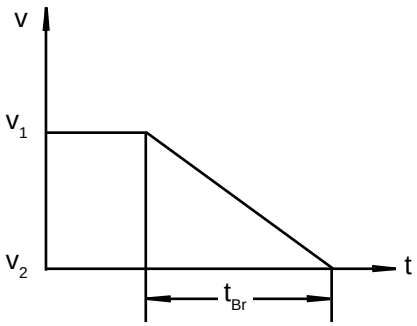

$v_2 = 0$

4.2.5

$$a_v = \frac{v_1 - v_2}{t_{Br}} = \frac{\Delta v}{t_{Br}} = \frac{v_1^2 - v_2^2}{2s}$$

4.2.6

$$s = \frac{t_{Br}}{2}(v_1 + v_2) = v_1\, t_{Br} + \frac{1}{2} a_v\, t_{Br}^2$$

4.2.7

$$t_{Br} = \frac{v_1 - v_2}{a_v} = \frac{\Delta v}{a_v} = \frac{2s}{v_1 + v_2}$$

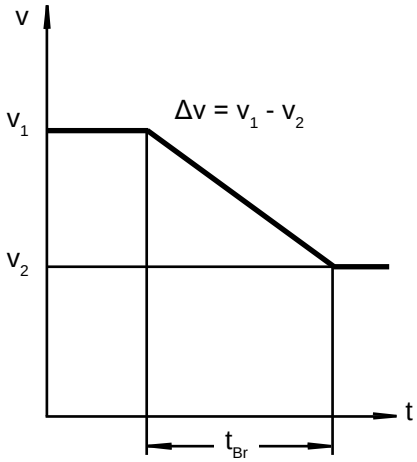

5.0 BRAKING FORCE OF A BRAKE CALIPER

The braking force of a brake caliper - determined from the caliper-specific torque diagrams - results with sufficient accuracy: T_{Br} in the selected pressure range of the caliper divided by 1/2 diameter of the largest brake disc specified in the diagram.

5.1

$$\left\| F_{Br} = \frac{T_{Br}}{0{,}5\ Ds\ max.} \right\|$$

6.0 ENERGY AND POWER OF THE BRAKE

6.1 Friction energy per braking

$$W_{Br} = \frac{\Delta n}{1{,}91 \cdot 10^4} M_{Br} \cdot t_{Br} = \frac{\Delta n^2 \cdot J}{0{,}18 \cdot 10^6}$$

6.2 Average braking power

$$\left\| P_{Br} = \frac{W_{Br}}{t_{Br}} = \frac{\Delta n^2 \cdot J}{0{,}18 \cdot 10^6 \cdot t_{Br}} \right\|$$

6.3 Permissible power absorbtion of the brake caliper and disc

The frictional heat occurring during braking naturally heats the brake discs and brake calipers. For safety and wear reasons, each brake caliper or disc may only be heated up to a certain temperature, which depends on the indicated braking power. Diagrams 1 and 2 show the maximum recommended braking performance of 12,7 mm and 25 mm discs as a function of braking time as well as the recommended maximum braking performance of a Type R&H 250.000.01 brake caliper for braking.

Under special conditions, these values are quite surpassable. We would like to ask you to contact us in these special cases.

$$P_{Br} < P_{Br\ d}$$

Diagram 1 (brake disc thickness = 12,7 mm)

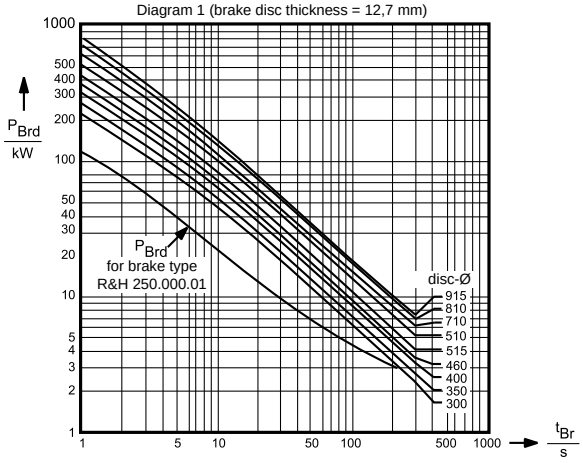

Diagram 2 (brake disc thickness = 25 mm)

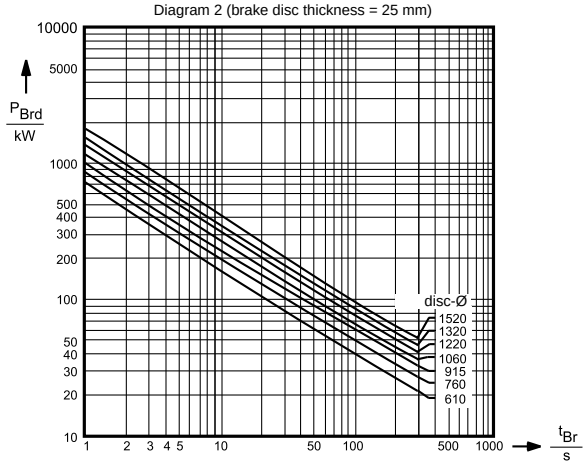

7.0 CONTINUOUS SLIP BRAKE

7.1 Calculation of braking torques

7.1.1

$$\left\| T_{Br\ req.}max. = \frac{D}{2} \cdot Z \right\|$$

7.1.2

$$\left\| T_{Br\ req.}min. = \frac{d}{2} \cdot Z \right\|$$

7.2 Calculation of the braking power of continuous slip brakes

7.2.1

$$\left\| P_C = \frac{Z \cdot v}{1000} \right\|$$

7.2.2

$$\| P_C \leq P_{Cd} \|$$

P_{Cd} = max. Recommended continuous braking power depending on the speed of the brake disc (see diagram 3).

Diagram 3

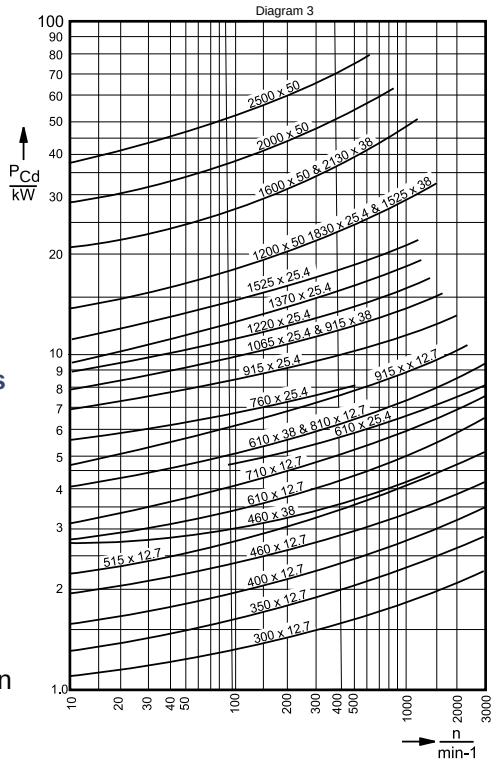

7.3 Permissible continuous power P_{DZ} of the brake caliper

The maximum continuous power recommended for a brake caliper is:

Type	P_{DZ}
R&H 100.000.01	2,5 - 3 kW
R&H 200.000.01	2,5 - 3 kW
R&H 250.000.01	2,5 - 3 kW
R&H 215.000.01 R&H 225.000.01 R&H 230.000.01 R&H 245.000.01	4 kW
R&H 250.000.02	5 - 6 kW
R&H 300.000.04	10 - 12 kW
R&H 350.000.01	14 kW

8.0 BRAKE PADS

Quality	Mixture	Coefficient of friction	max. temp. [°C]
J 755	sintered metal	0,4	850
C 1203	high rubber content	0,4	250
544	standard	0,3	350
570	graphited	0,2	200
C 3002	highly graphited	0,15	200

In order to minimize the wear of the brake pads and the environmental impact, the peripheral speeds of the brake disc should not exceed the following values.

8.1

$V_{u\,max.}$ for standard pad

$V_{u\,max.}$ = 3000 m/min. 50 m/sec.

8.2

$V_{u\,min.}$ for standard pad

$V_{u\,min.}$ 1,5 m/min. = 0,025 m/sec. (to avoid the slip-stitch effect, this value must not be undercut)

In exceptional cases where these recommended guide values are exceeded or undercut, we ask you to contact us, specifying the application-specific technical data.

ELEPHANT BRAKES BY RIETSCHOTEN

Questionnaire

for brake selection

To download this page as a PDF, please use the QR code.

Name: _____ Dept.: _____

Company: _____

Address: _____ Zip Code / City: _____

Phone: _____ E-Mail: _____

Brake application:

_____
_____
_____
_____
_____
_____
_____
_____

Shaft direction:

horizontal ☐

vertical ☐

Position of the brake(s) at the brake disc:

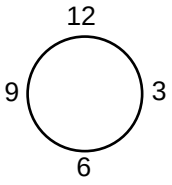

preferred: 3 h or 9 h

Actuation:

mechanic ☐ penuamtic ☐ hydraulic ☐ spring-applied ☐ hydr. released ☐ pneum. released ☐ elektr. released

Web tension:

- max. winding diameter	D =		mm
- min. winding diameter	d =		mm
- web tension min. / max.	Z =		N
- tension speed min. / max.	V =	/	m/s
- duration of operation	Ed =		min./h
- disc diameter min. / max.	Ø =	/	mm

Stop and / or holding brake:

- rotation speed	n =		1/min
- braking time	t =		sek.
- inertia	J =		kgm²
- brake operations / hour	T =		1/hour
- disc diameter min. / max.	Ø =	/	mm
- motor power	P =		kW

Specific requirements:

Estimated delivery date: Anticipated requirement:

Send the completed form by fax: +49 (0) 511 - 37207-77 or e-mail: contact@elephantbrakes.com

brake discs,
hubs,
couplings,
clamping elements

Brake Disc

Type 502.000.001

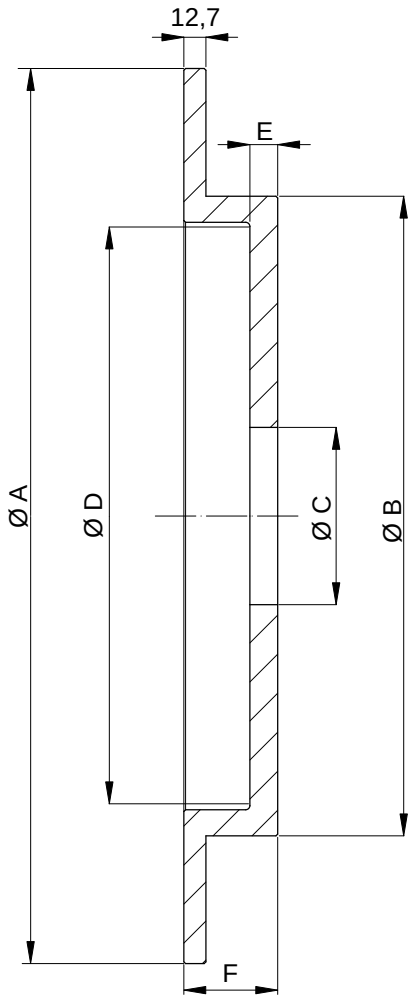

Material: EN-GJS-400-15

C = pilot bore

Nomi-nal-Ø [mm]	Item-No.	*Part-No.*	Ø A [mm]	Ø B [mm]	Ø C [mm]	Ø D [mm]	E [mm]	F [mm]	J [kgm²]	Mass [kg]
915	502.091.001	***10027***	915	760	250	718	25	54	11,0	110
810	502.081.001	***10026***	812	660	102	616			6,5	87
710	502.071.001	***10024***	711	565		527	19		3,1	51
610	502.061.001	***10017***	610	464		434	16		1,6	34,2
515	502.051.001	***10015***	514	368		338			0,8	23,2
460	502.046.001	***10011***	457	311		281			0,5	18,2
400	502.040.001	***10009***	406	260		235	13		0,3	13
350	502.035.001	***10007***	356	210	60	185	16		0,2	10,9
300	502.030.001	***10005***	300	181	51	157	13	41	0,1	7
250	502.025.001	***10002***	250	128	30	112	6	36	0,035	4

NOTE:
disc w/o centre bore
Part-No.: 10831

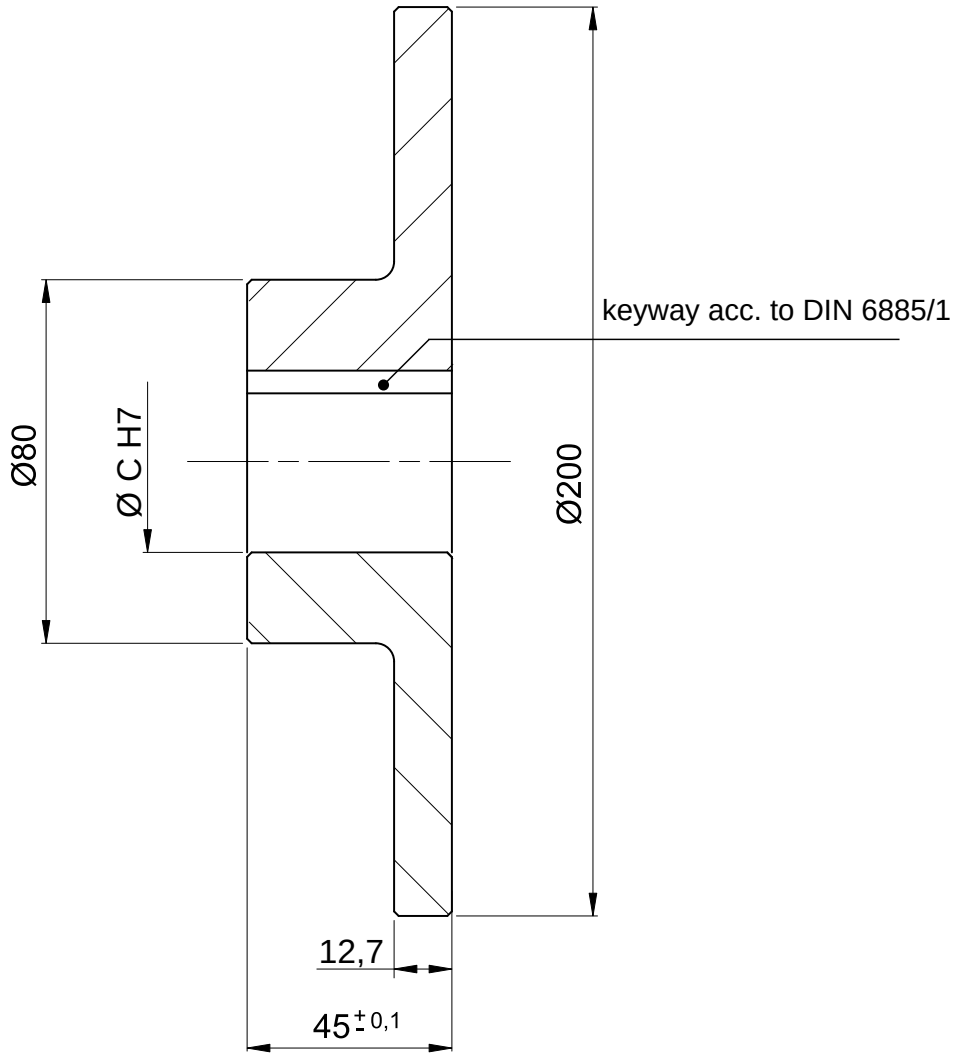

Dimension C acc. to customer requirements max. Ø 60
Edges 1,5 x 45° chamfered
Material: EN-GJS-400-15
Mass: 4 kg (w/o centre bore)

Brake Disc

Type 503.000.001

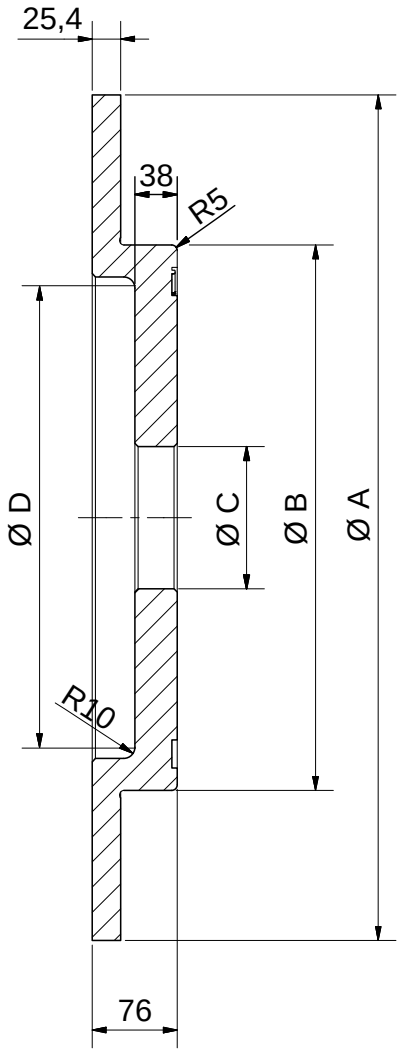

Material: EN-GJS-400-15

C = pilot bore

Part-No.	Ø A [mm]	Ø B [mm]	Ø C [mm]	Ø D [mm]	J [kgm²]	Mass [kg]
10751	1820	1523	915	1463	249	533
10032	1520	1220	450	1160	123	401
10031	1220	915	240	855	50	278
10029	1000	732		682	22,4	186
10028	915	647		587	16,2	150
10331	810	542	127	482	9,7	130
11465	755	487		420	6,6	107
10025	700	432		372	5	90
10018	610	343		283	2,9	67,2

Brake Disc

Type 504.000.001

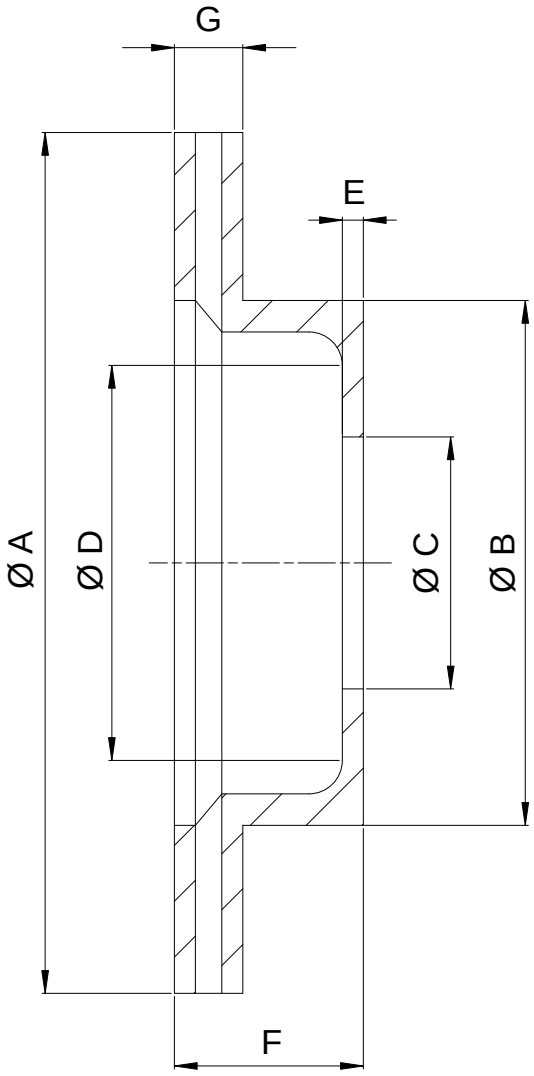

Material: EN-GJS-400-15

C = pilot bore

Nomi-nal-Ø [mm]	Item-No.	*Part-No.*	Ø A [mm]	Ø B [mm]	Ø C [mm]	Ø D [mm]	E [mm]	F [mm]	G [mm]	J [kgm²]	Mass [kg]
610	504.061.001	***10019***	610	404	127	374	22	60	25,4	1,95	41
460	504.046.001	***10012***	457	311	102	286	16			0,65	21,5
270*	504.027.001	***10003***	270	140	88	127	8	59	22	0,06	5,8

*w/ 5 x Ø10,5 mm bolt circle: Ø108

Brake Disc

DIN 15432, shape B solid

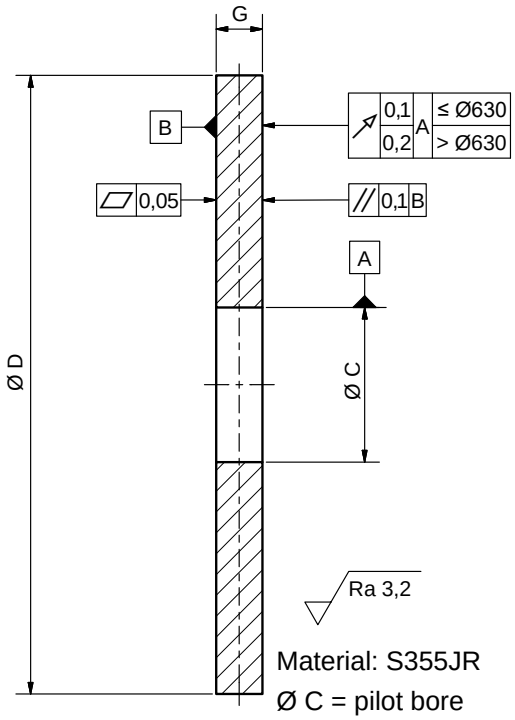

edges: 1x45°

tolerances:
ISO 2768-mH

Material: S355JR
Ø C = pilot bore

Part-No.	Ø C [mm]	Ø D [mm]	G [mm]	J [kgm²]	Mass [kg]
12805	50	250	15	0,045	5,5
11055		315		0,045	9,0
12806			30	0,228	18,0
11056	75	355	15	0,184	11,2
12809			30	0,368	22,4
11057	100	400	15	0,298	14,0
12811			30	0,595	28,0
11058		450	15	0,475	17,9
12813			30	0,95	35,8
11059		500	15	0,725	22,3
12815			30	1,45	44,6
12816	125	560	15	1,14	27,7
12817			30	2,28	55,5
11061		630	15	1,83	35,5
12819			30	3,66	71,0
12820		710	15	2,96	45,5
12821			30	5,91	91,0
12822	150	800	15	4,76	57,5
12823			30	9,52	115,0
12824		900		15,26	146,6
12825	200	1000		23,23	178,7

Brake Disc

Type 506.000.001, ventilated

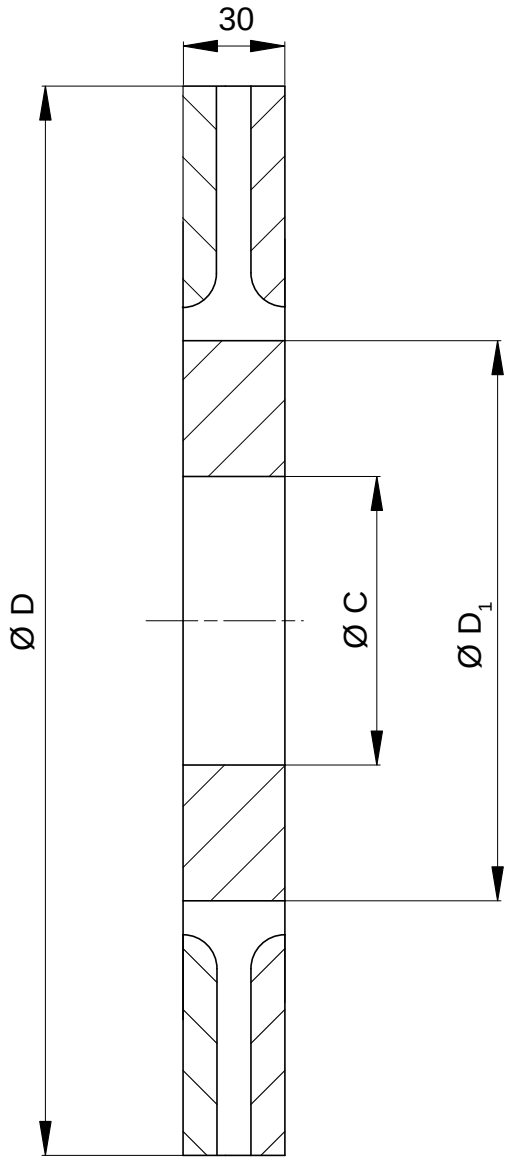

Material: EN-GJS-400-15

Nominal-Ø [mm]	*Part-No.*	Ø D [mm]	Ø C [mm]	Ø D_1 [mm]	Mass [kg]
315	***11062***	315	85	145	11
355	***11063***	355	105	185	13
400	***11064***	395	115	230	18,2
450	***11065***	445	120	276	23,2
500	***11066***	495	140	326	27
550	***11067***	550	170	380	31
630	***11068***	625		450	44

Hub

Type 601.000.001

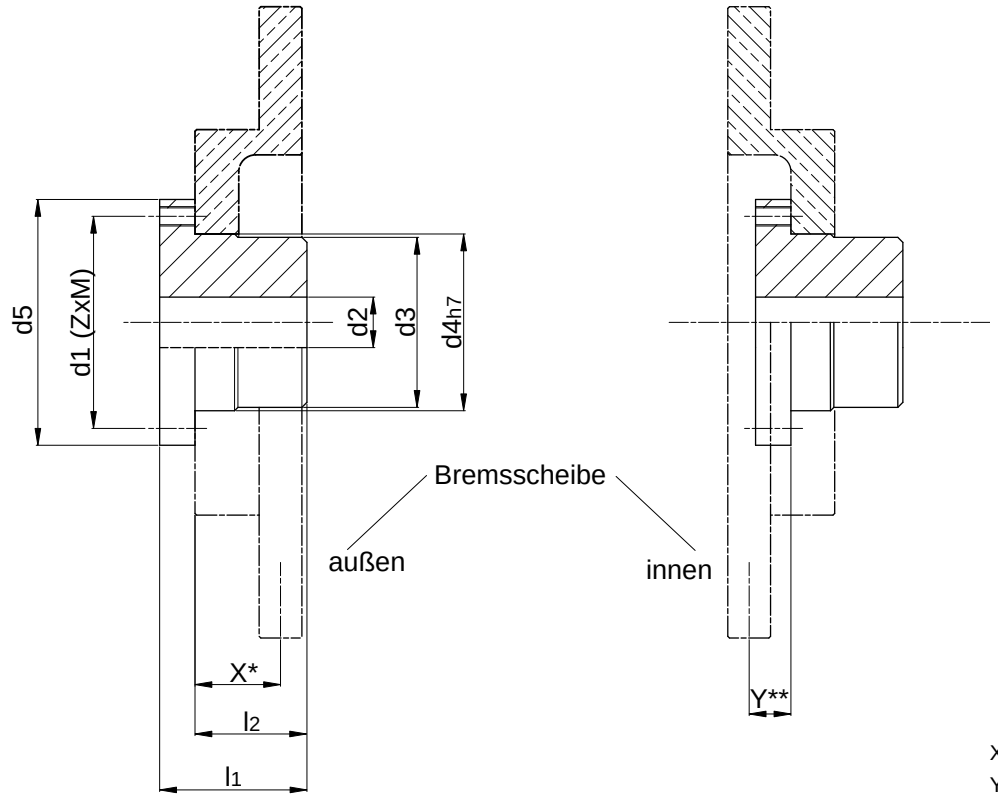

NOTE:
for R&H
brake discs

X* = F - G/2
Y** = F - G/2 - E

Material: S 355 / C 35
Hubs on request with finish bore (acc. to ISO-H7) and keyway (acc. to DIN 6885/1 available).

SIze	Item No.	*Part-No.*	Mass [kg]	J [kgm²]	for brake disc sizes [mm]
V	601.380.001	***10752***	190	3,9	Ø810 - Ø1600
IV	601.242.001	***10154***	54	0,68	Ø515*** - Ø810
III	601.147.001	***10153***	15,5	0,18	Ø400 - Ø810
II	601.105.001	***10152***	7	0,04	Ø300 - Ø610
I	601.055.001	***10151***	1	0,003	Ø250 und Ø300

***not Ø610 x 25,4

Size	Item No.	d1 [mm]	d2 [mm]	d3 [mm]	d4 [mm]	d5 [mm]	l1 [mm]	l2 [mm]	Z [mm]	M
V	601.380.001	405	110 - 230	368	370	438	240	200	24	M 20
IV	601.242.001	274	100 - 150	241	242	308	176	143	11	M 16
III	601.147.001	175	60 - 95	146	147	200	117	93,5	10	M 12
II	601.105.001	126	28 - 65	104,5	105	146	87	66,5	8	M 10
I	601.055.001	69	12 - 35	54,5	55	81	49	38,5	5	M 6

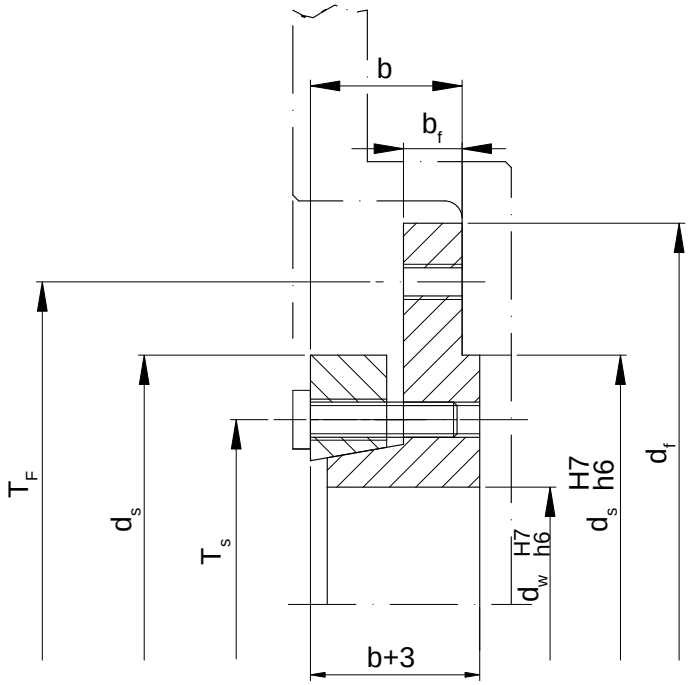

Part-No.	M_t [Nm]	d_w [mm]	d_F [mm]	b [mm]	d_s [mm]	T_s [mm]	Z_s	M_{As} [Nm]	T_F [mm]	Z_F	M_{AF} [Nm]	b_F [mm]	Mass [kg]
12855	310	30	105	23	70	54	6/M 6	12	90	4/M 6	12	8	1
12963	450	35	110		75	59	7/M 6		95	5/M 6			1,1
12964	645	40	130	26	85	64	8/M 6		110	4/M 8	30	10	1,3
12965	850	45	135		90	68	9/M 6		115	4/M 8			1,4
12966	1100	50	140	27	95	73	10/M 6		120	5/M 8			1,7
12967	1375	55	150		105	78	11/M 6		130	5/M 8			1,9
12868	1725	60	155	28	110	84	12/M 6		135	6/M 8			2
12968	1940	65	170	30	125	95	7/M 8	30	150	7/M 8			2,6
12955	2500	70	180		135	100	8/M 8		160	8/M 8			3,1
12791	3000	75	195	34	140	105	9/M 8		170	6/M 10	59	12	3,6
12969	3650	80	200		145	110	10/M 8		175	7/M 10			4,1
12970	4150	85	210	37	155	118	11/M 8		185	7/M 10			4,8
12971	4950	90	215		160	123	12/M 8		190	8/M 10			5,4
12883	7350	100	235	40	180	138	10/M 10	59	210	10/M 10			5,7

Attention: Note the pilot bore C when using cranked brake discs!

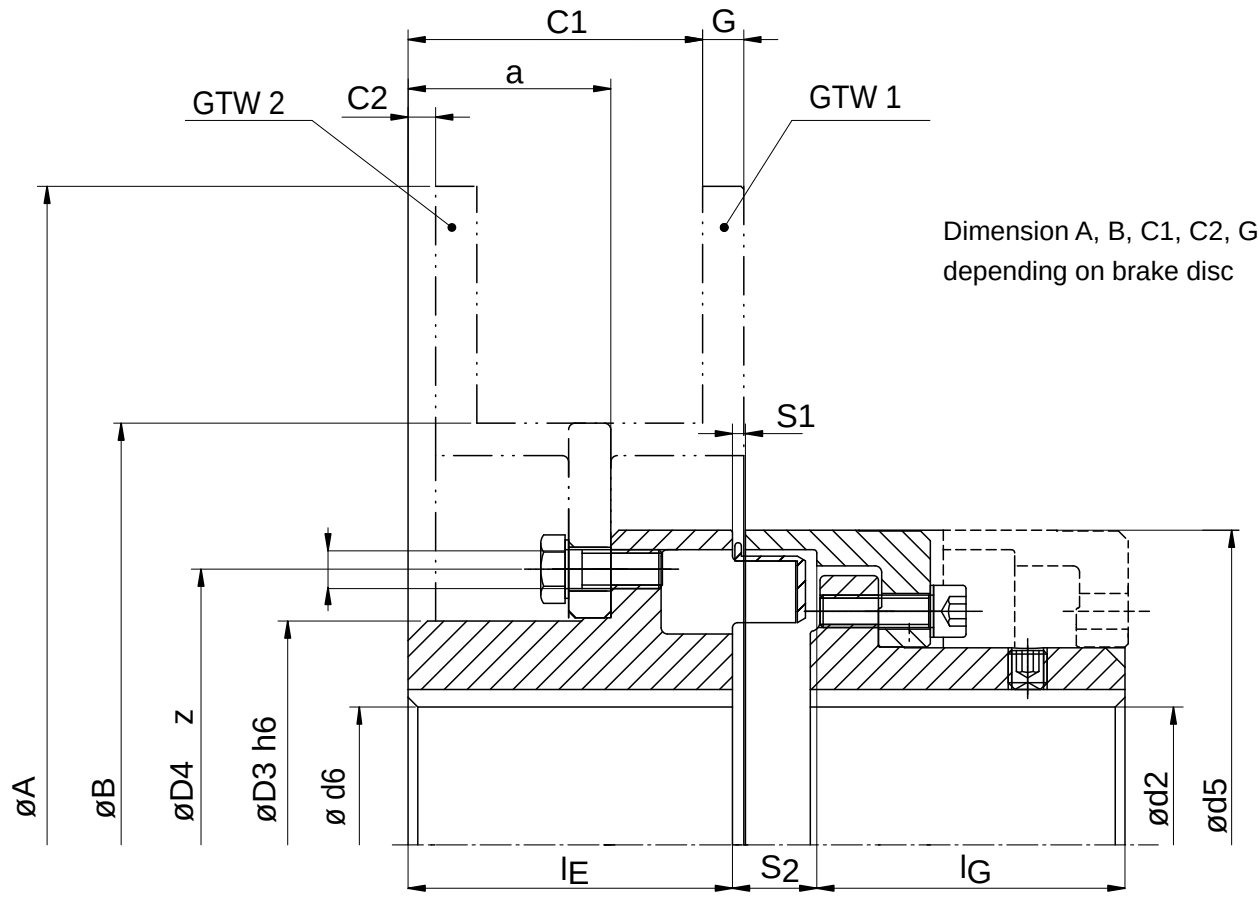

Dimension A, B, C1, C2, G depending on brake disc

Part-No.	Ø d5 [mm]	TKN [Nm]	Tk_{max} [Nm]	N_{max} [min^{-1}]	max. Ø d2 [mm]	max. Ø d6 [mm]	l_E [mm]	l_G [mm]	a [mm]	S_1 [mm]	S_2 [mm]	D3 H7/h6 [mm]	D4 [mm]	z	M	m [kg]	J [kgm²]
12391	112	150	310	6000	46	42	60	58	38,5	3,5 ± 1,0	15 ± 1,0	69	87	6	M 8	5	0,006
12392	128	250	500	5000	53	52	70	68	45,5	3,5 ± 1,0	16 ± 1,0	86	106			7,9	0,012
12786	148	390	800	4500	65	58	80	78	52,5	3,5 ± 1,0	18 ± 1,0	95	120		M 10	12,3	0,022
12794	168	630	1.300	4000	75	72	90	87	56,5	3,5 ± 1,5	21 ± 1,0	120	145	8		18,3	0,049
12795	194	1.050	2.200	3500	85	85	100	97	62,5	3,5 ± 1,5	24 ± 1,5	140	170		M 12	26,7	0,096
12796	214	1.500	3.100	3000	95	92	110	107	68,5	4,0 ± 2,0	26 ± 1,5	155	185	9		35,5	0,160
12393	240	2.400	4.800	2750	100	102	120	117	75,5	4,0 ± 2,0	30 ± 2,0	170	200	10		45,6	0,263
12300	265	3.700	7.500	2500	115	120	140	137	90,5	5,5 ± 2,5	33 ± 2,5	200	230		M 16	65,7	0,457
12977	295	4.900	10.000	2250	130	130	150	147	98,5	8,0 ± 2,5	37 ± 2,5	220	260			83,9	0,736
12394	330	6.400	13.000	2000	135	150	160	156	104,5	8,0 ± 2,5	40 ± 2,5	250	280			126	1,296
11463	370	8.900	18.200	1750	160	170	180	176	118,5	8,0 ± 2,5	43 ± 2,5	280	320	11		177	2,288
12395	415	13.200	27.000	1500	180	185	200	196	135,5	8,0 ± 2,5	45 ± 2,5	310	350	12		249	4

Dimensions A, B depending on brake disc
Dimension E1 = B + y or E + y
Dimension L = 2l + E1
Tk_{max} = 2 x Tkn

Angular misalignment 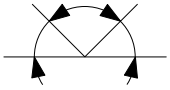 2 x 0,75°

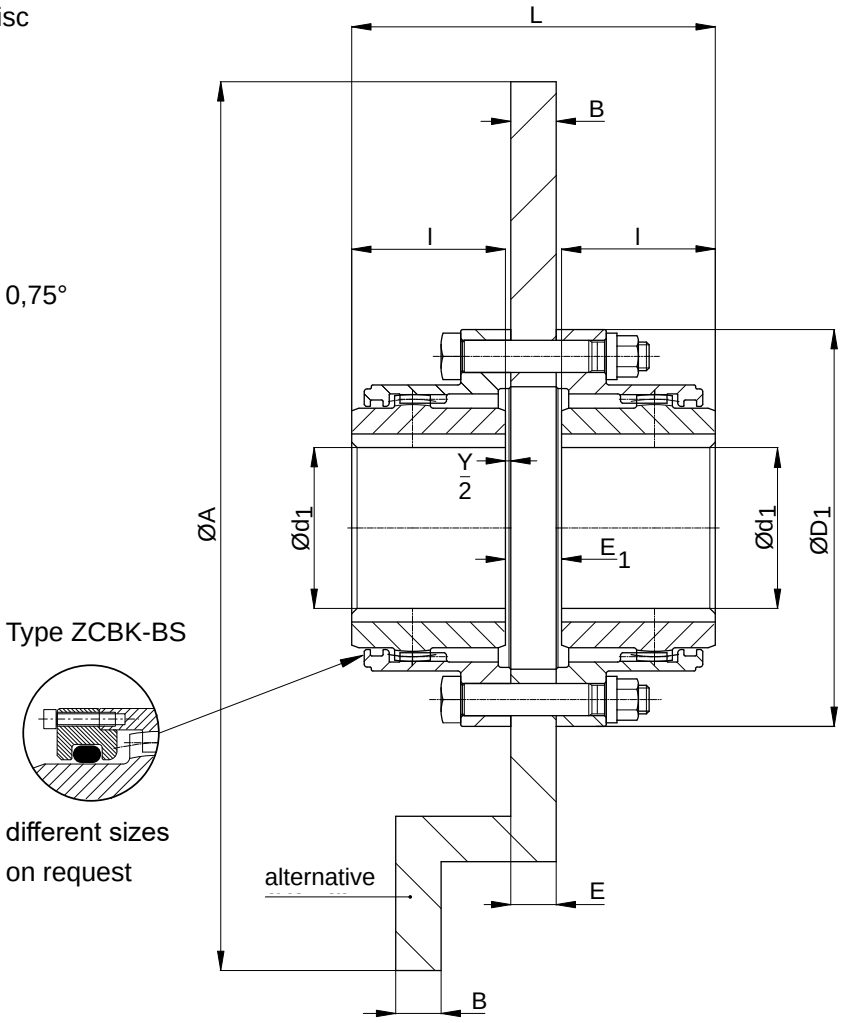

Part-No.	Size	TKN [Nm]	radial misalign-ment [mm]	n_{max} [min^{-1}]	d1 min - max [mm]	D1 [mm]	A min (cranked) [mm]	y [mm]	l [mm]	Mass [kg]	J (w/o bd) [kgm^2]
12556	ZCAK-BS 111	1750	0,42	6000	0 - 50	111	250	3	43	4	0,004
12557	ZCAK-BS 152	2750	0,51	4600	0 - 60	152	300		50	8,4	0,018
12558	ZCAK-BS 178	5500	0,66	4200	0 - 75	178	350		62	14,1	0,040
12559	ZCAK-BS 213	8500	0,77	4000	0 - 95	213	400	5	76	24,8	0,102
12560	ZCAK-BS 240	13500	0,99	3850	0 - 110	240	460		90	36,4	0,187
12561	ZCAK-BS 280	22000	1,15	3700	60 - 130	280	460	6	105	58	0,407
12562	ZCAK-BS 318	35000	1,33	3200	70 - 155	318	515		120	87	0,801
12563	ZCAK-BS 346	43000	1,5	2900	85 - 170	346	610	8	135	113,7	1,248
12564	ZCAK-BS 389	68000	1,75	2600	95 - 190	389	610		150	163,1	2,370

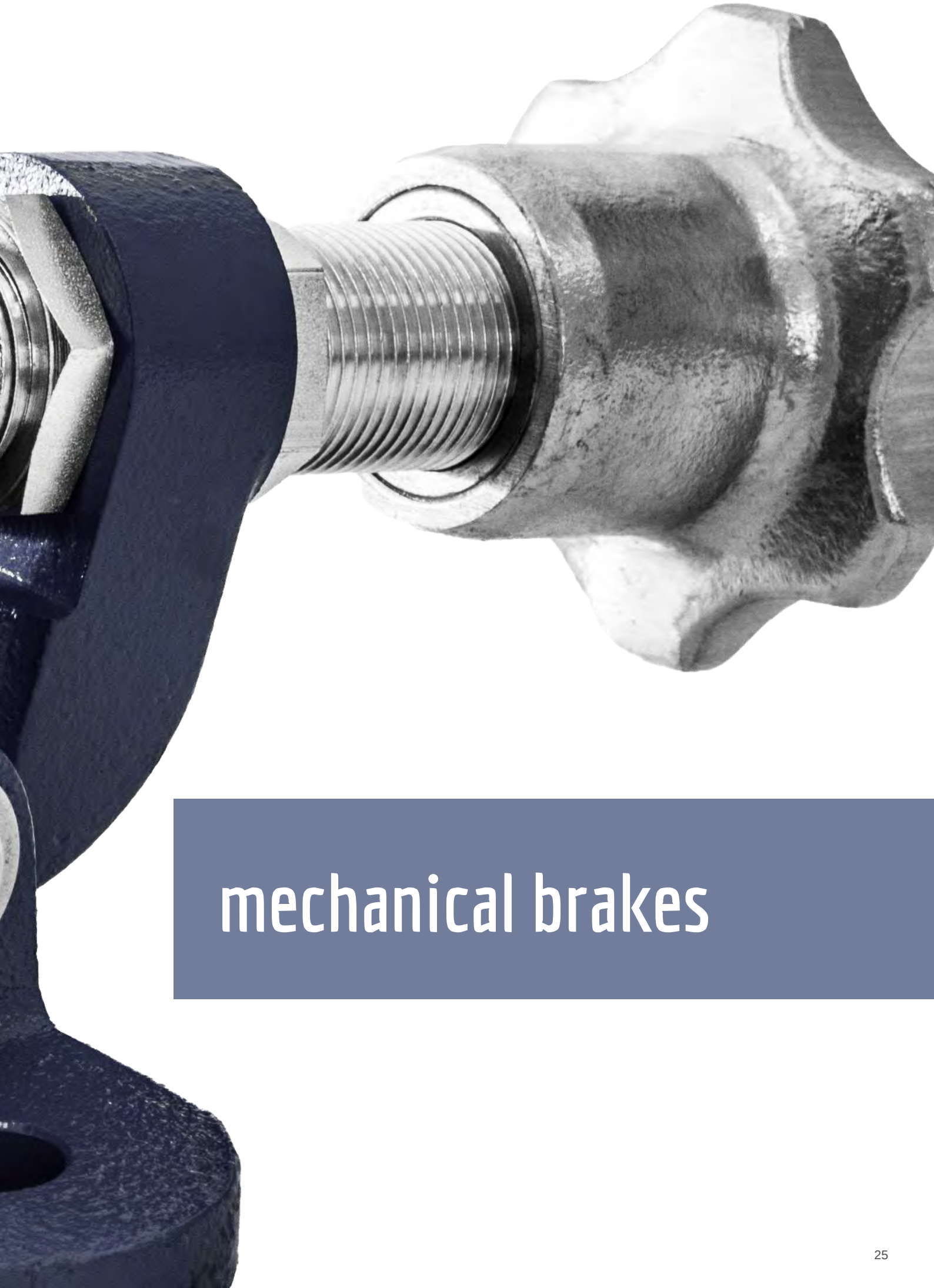

mechanical brakes

ELEPHANT BRAKES BY RIETSCHOTEN

Brake Type R&H 050.098.01

hand operated

Part-No.: 10327

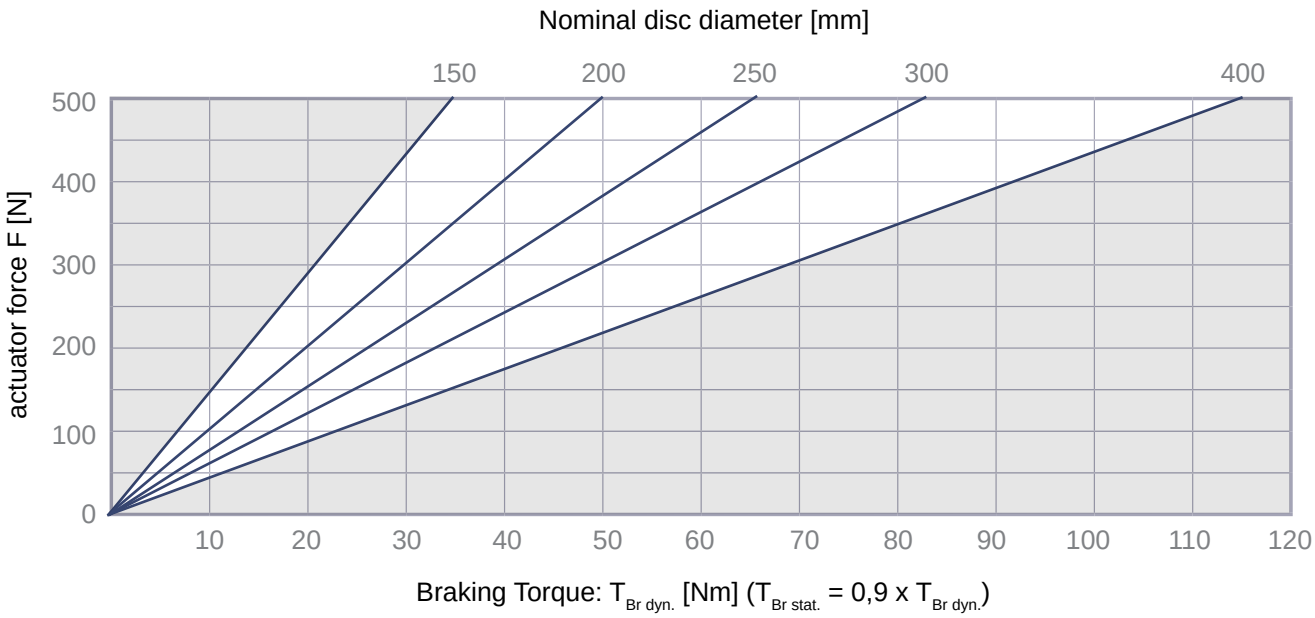

Mass: 1,5 kg

1 turn ≈ 160 N

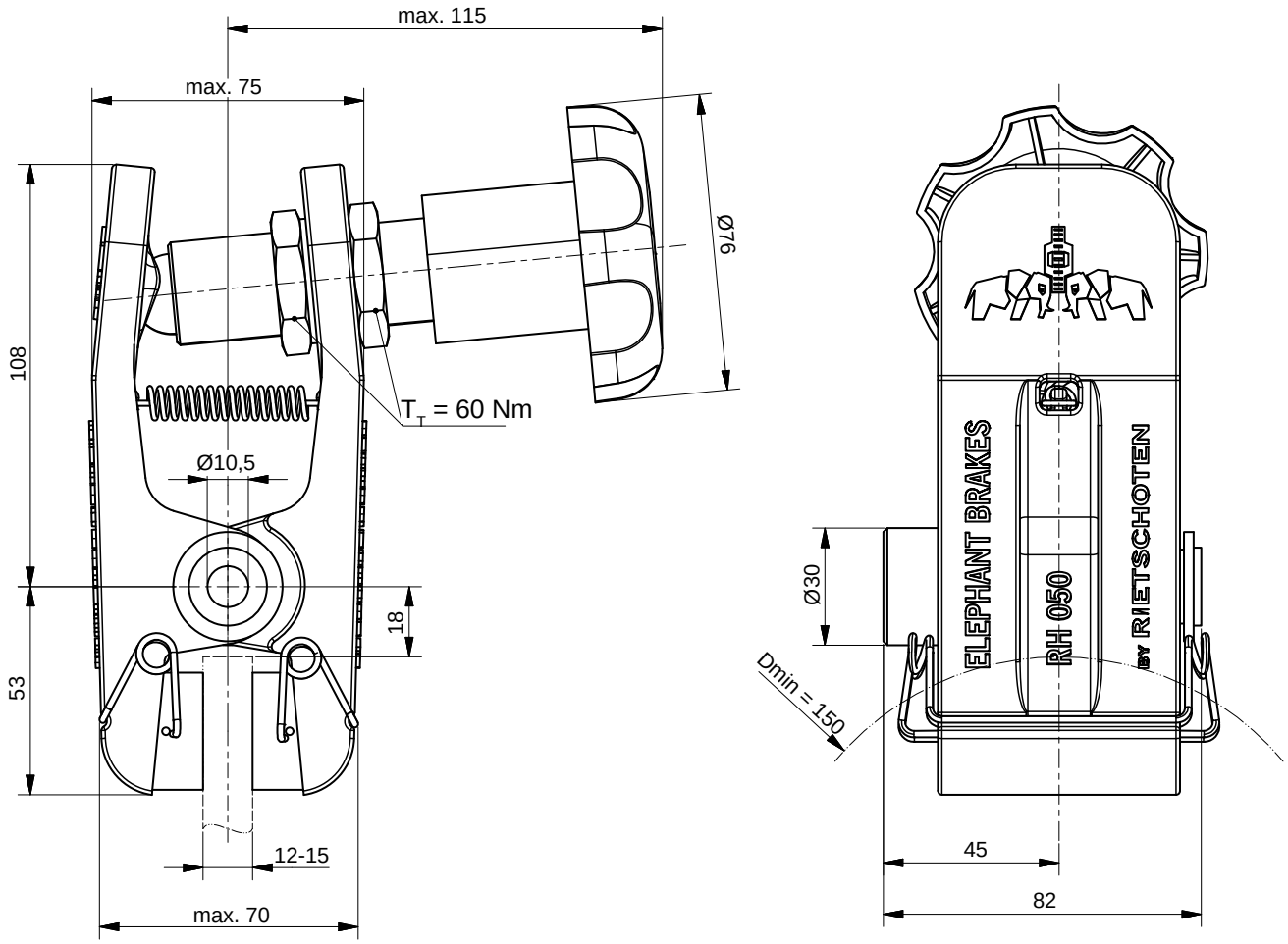

Mounting position is horizontal. Please get in touch if different.

A right hand mounted actuator is standard – left hand mounted please state with order.

Brake Type R&H 100.098.01

hand operated

Part-No.: 10393

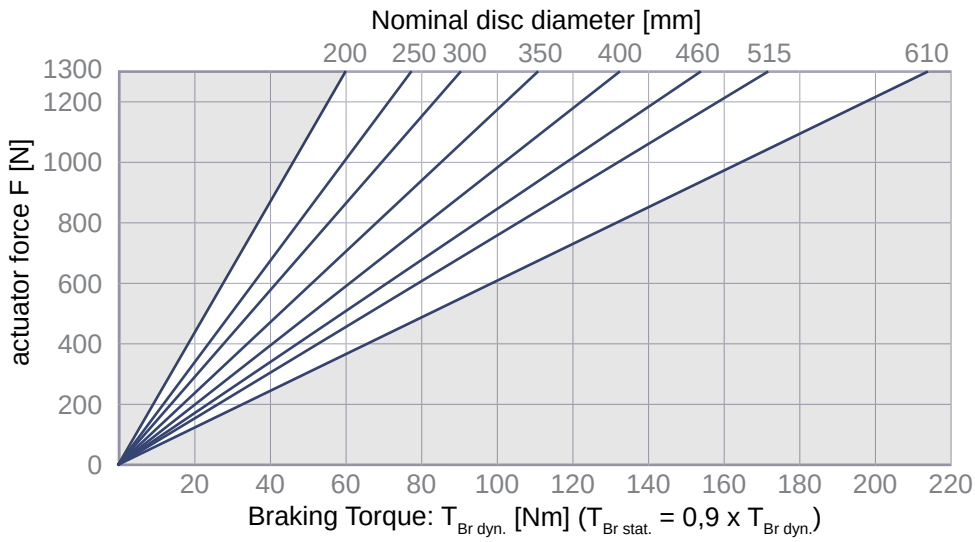

Mass: 3,3 kg

1 turn ≈ 160 N

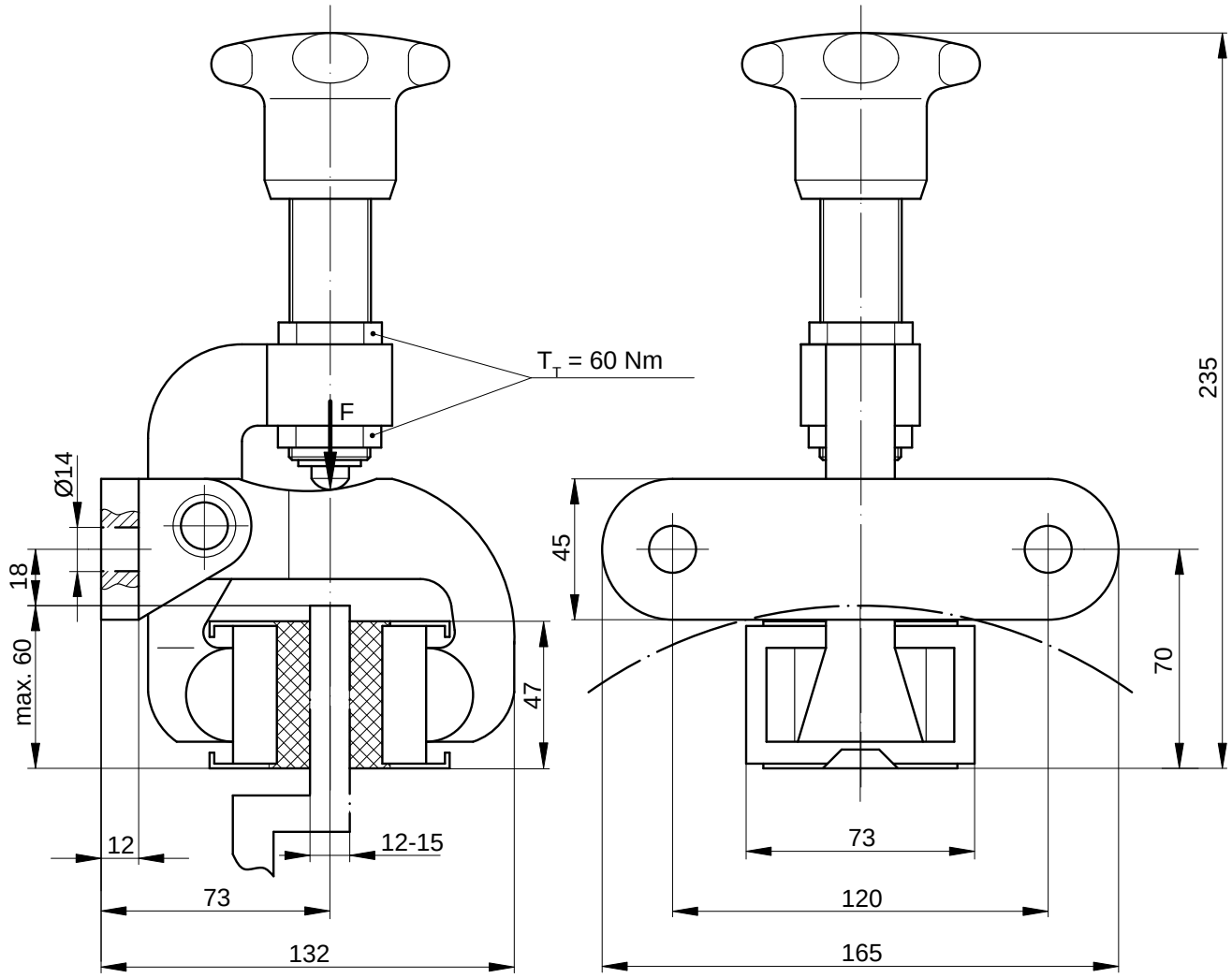

Mounting position is horizontal. Please get in touch if different.

ELEPHANT BRAKES BY RIETSCHOTEN

Brake Type R&H 100.096.01

hand operated

Part-No.: 12872

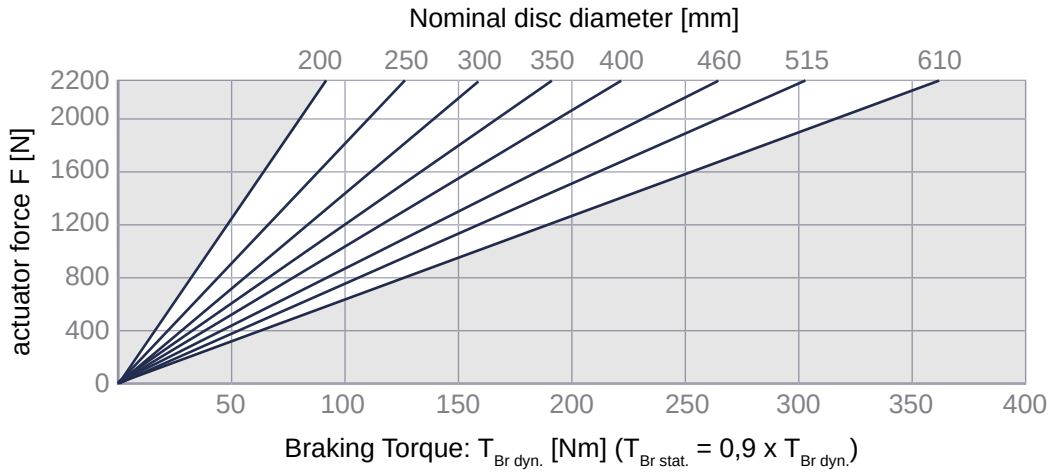

Mass: 4,3 kg

1 turn ≈ 260 N

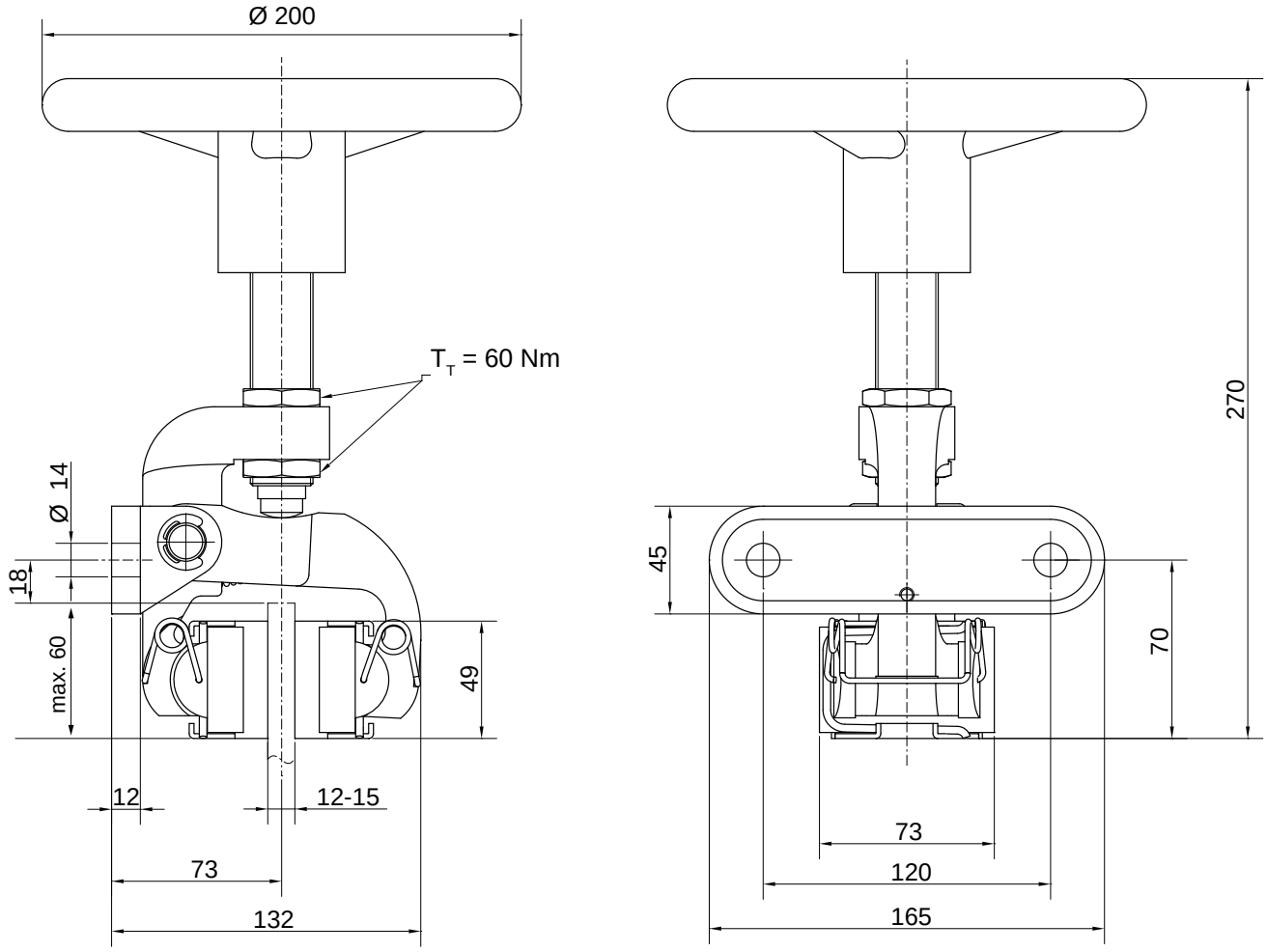

Mounting position is horizontal. Please get in touch if different.

ELEPHANT BRAKES BY RIETSCHOTEN

Brake Type R&H 100.099.01

mechanically actuated

Part-No.: 10394

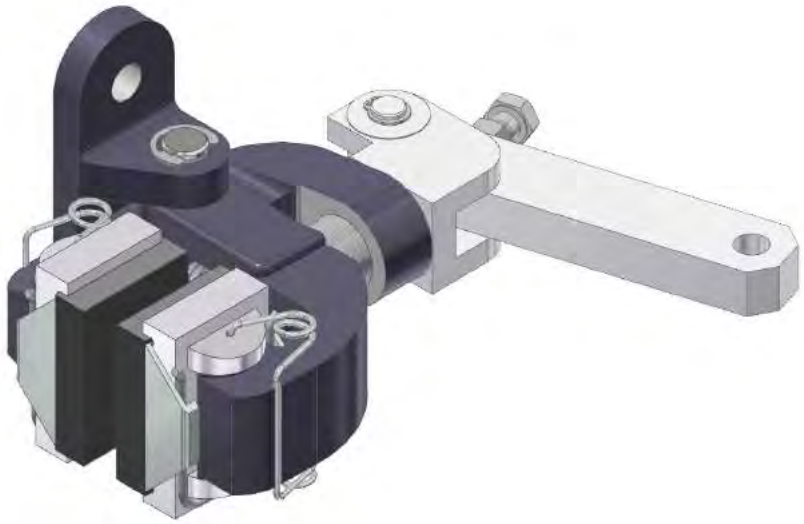

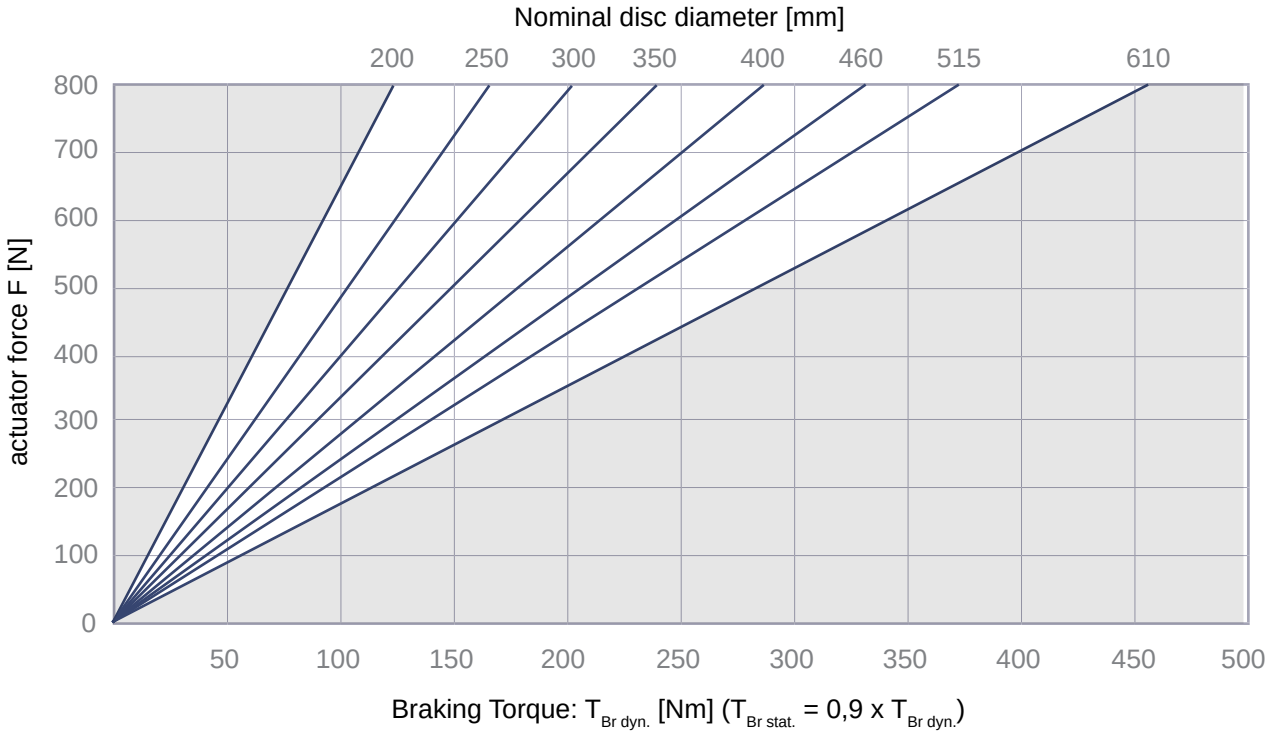

Mass: 3,7 kg

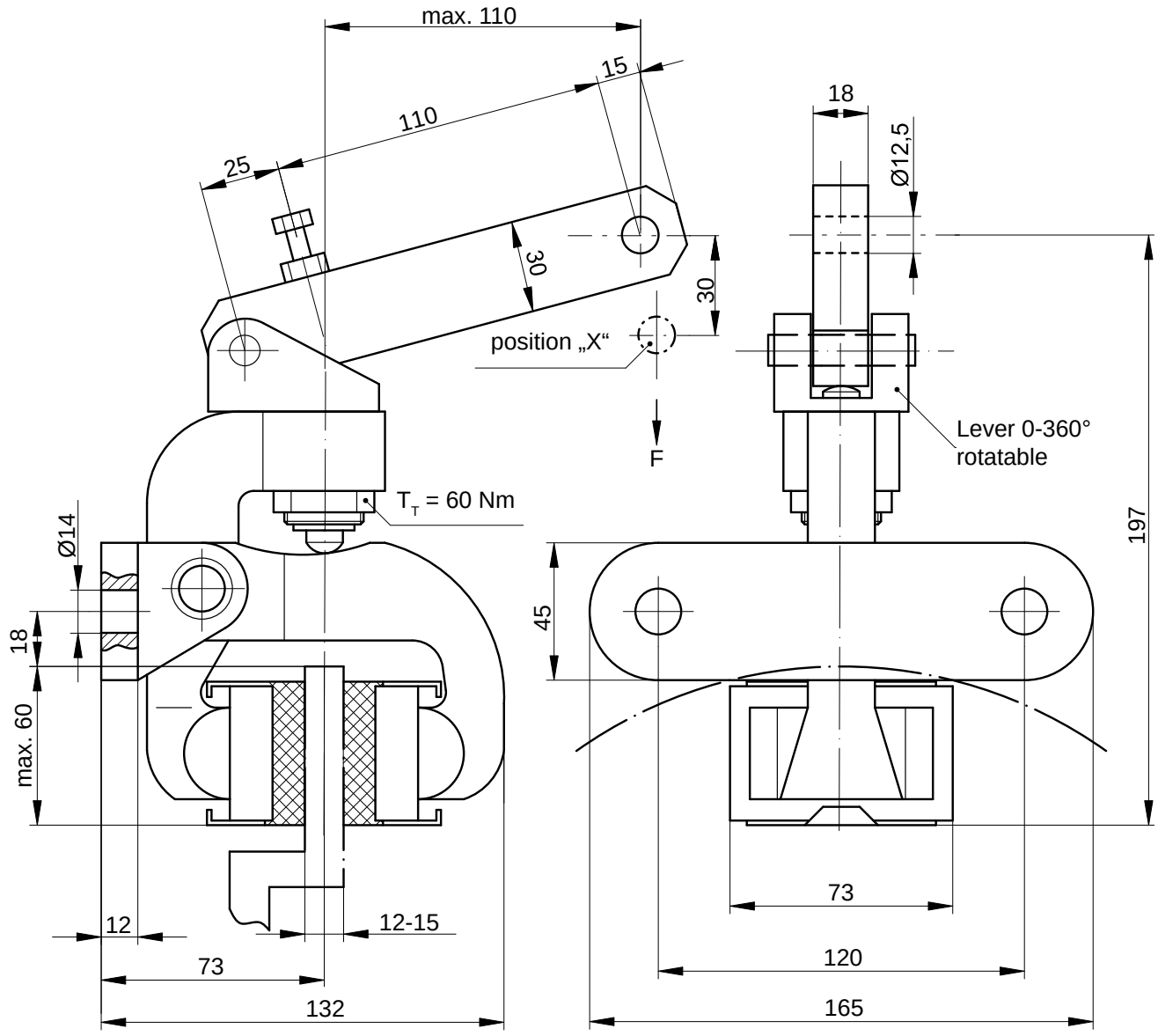

Mounting position is horizontal. Please get in touch if different.

A readjustment will be necessary if position „X“ is reached.

ELEPHANT BRAKES BY RIETSCHOTEN

Brake Type R&H 125.098.01

hand operated

Part-No.: 10656

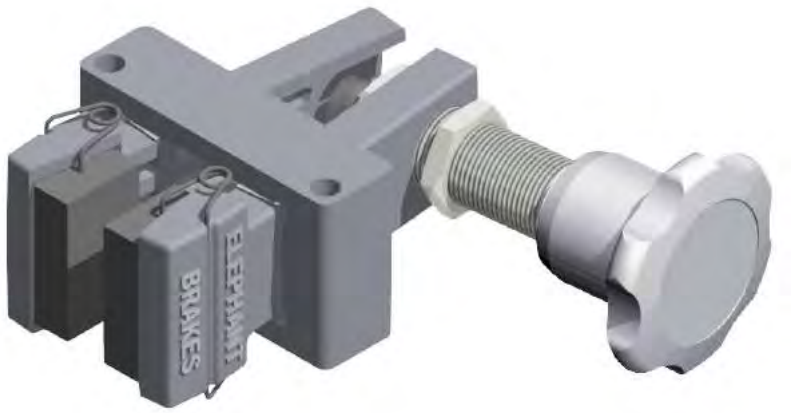

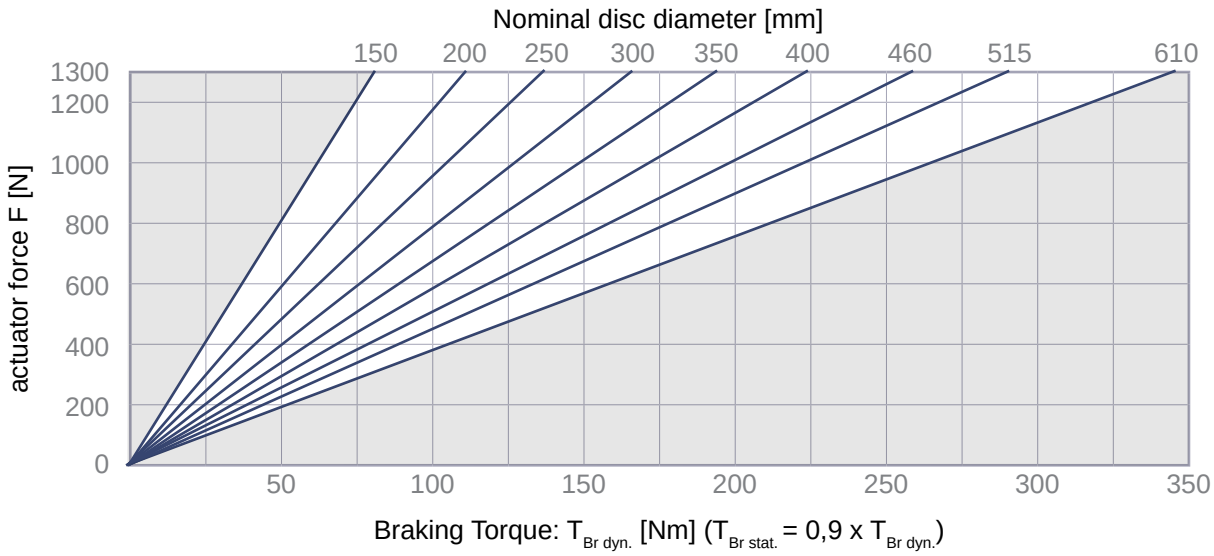

Mass: 1,2 kg

1 turn ≈ 160 N

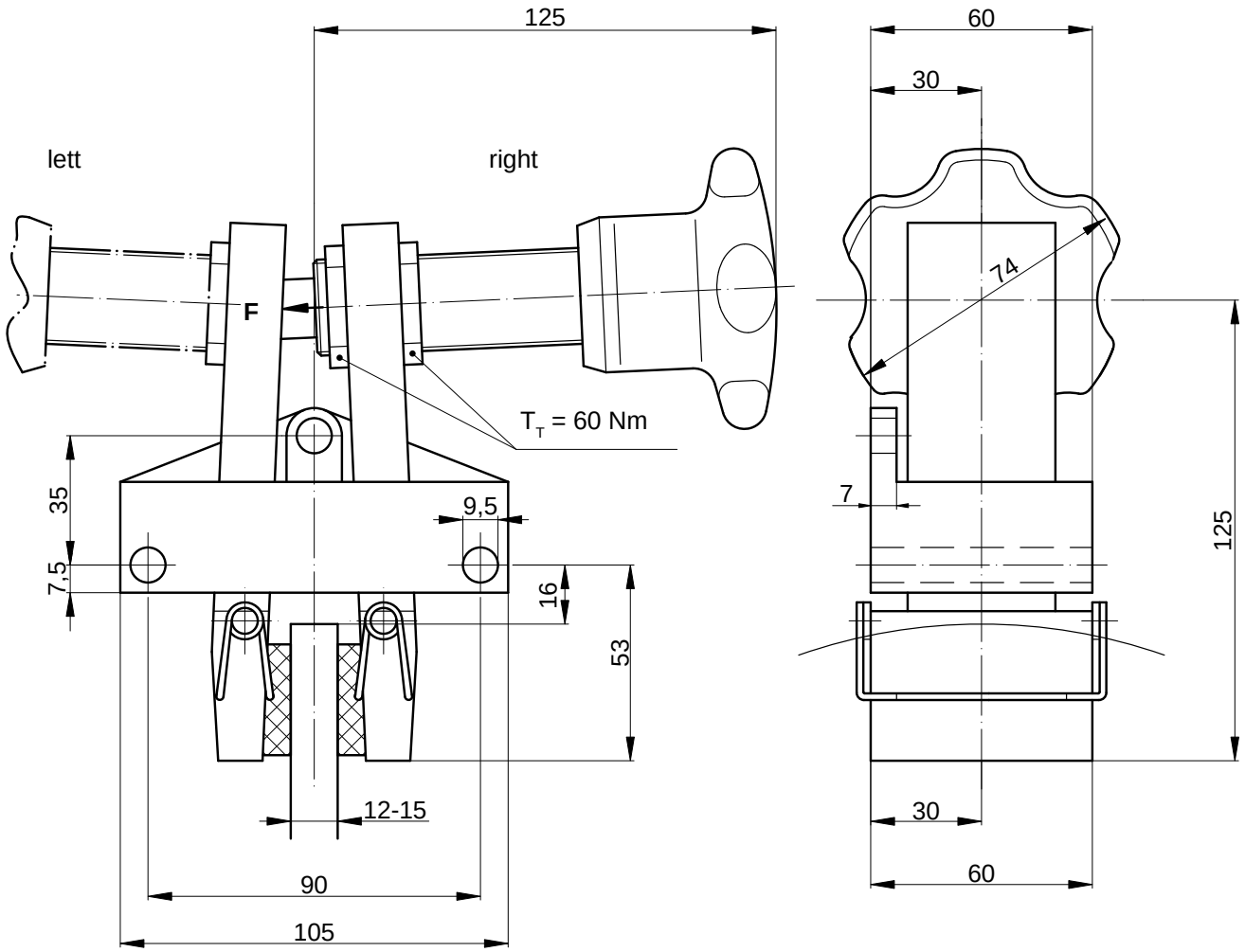

Mounting position is horizontal. Please get in touch if different.
A right hand mounted actuator is standard – left hand mounted please state with order.

ELEPHANT BRAKES BY RIETSCHOTEN

Brake Type R&H 200.098.01

hand operated

Part-No.: 11147

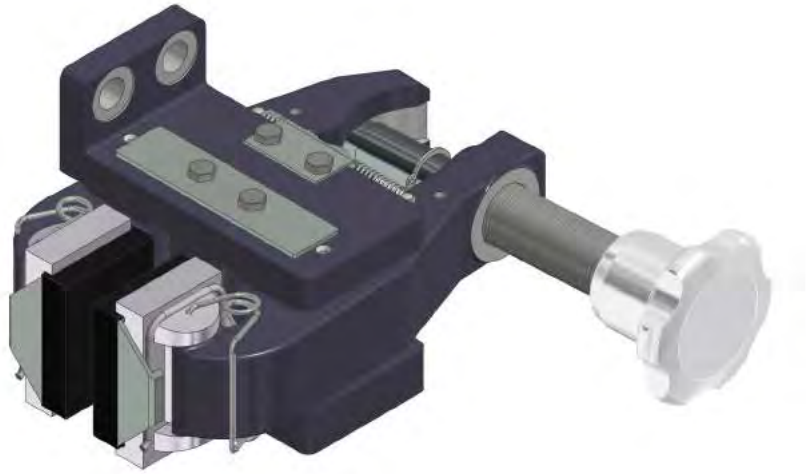

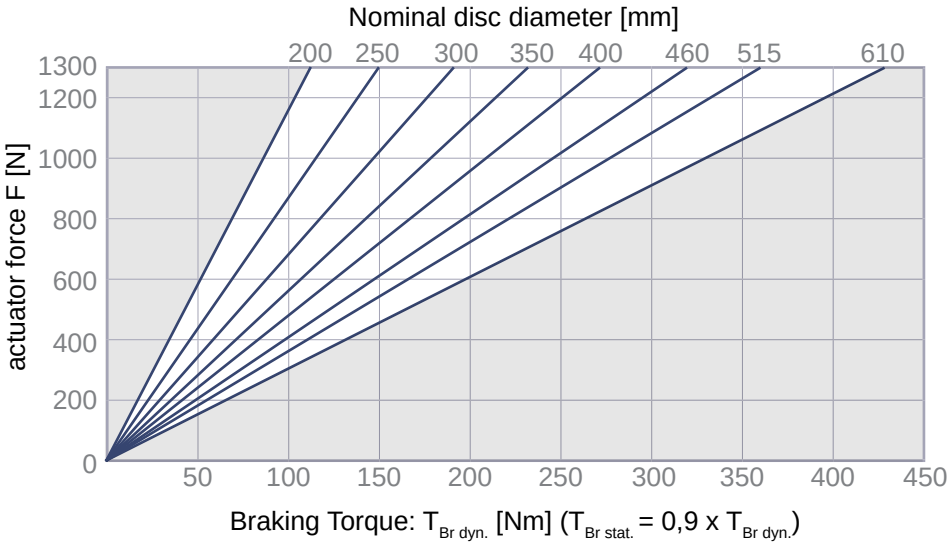

Mass: 7,9 kg

1 turn ≈ 160 N

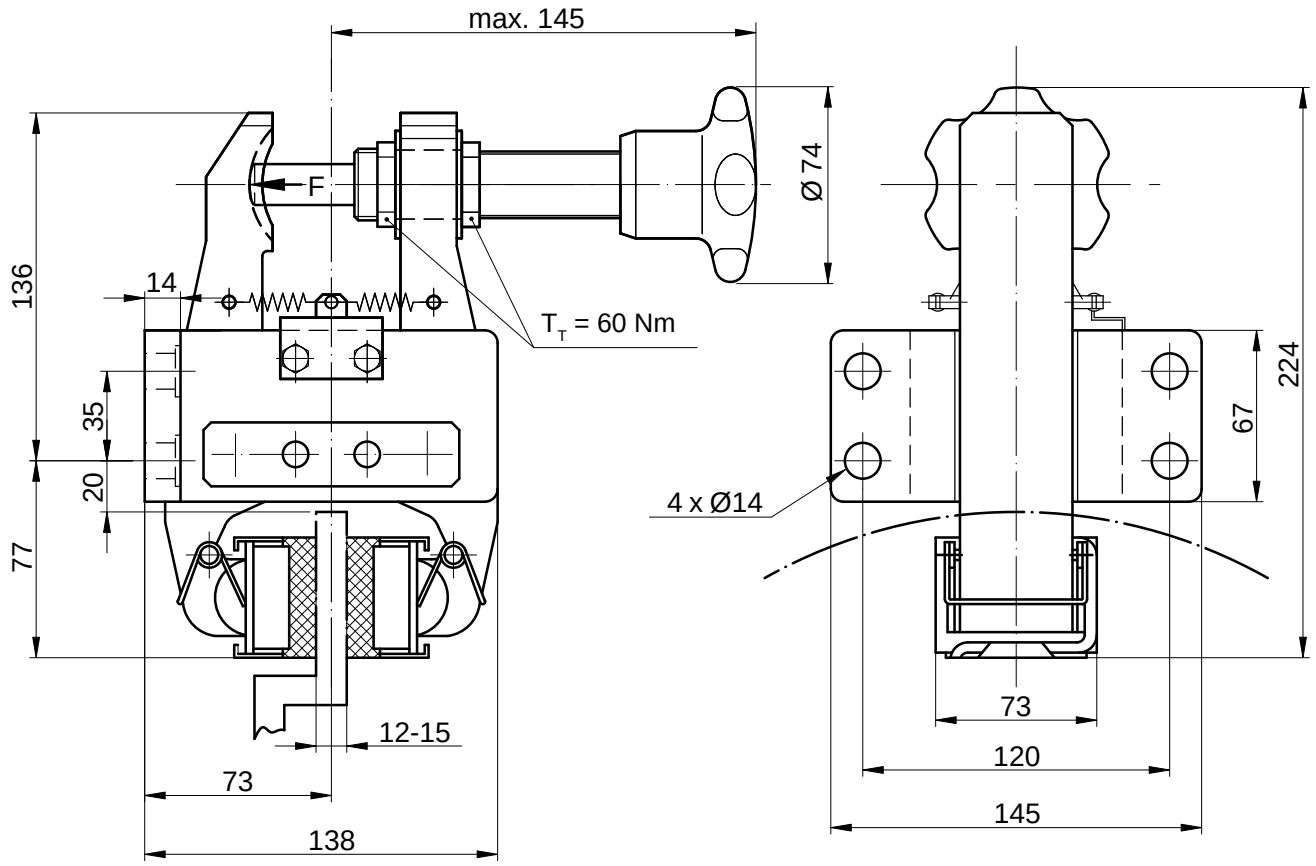

Mounting position is horizontal. Please get in touch if different.
A right hand mounted actuator is standard – „flange side“ mounted please state with order.

ELEPHANT BRAKES BY RIETSCHOTEN

Brake Type R&H 200.096.01

hand operated

Part-No.: 11531

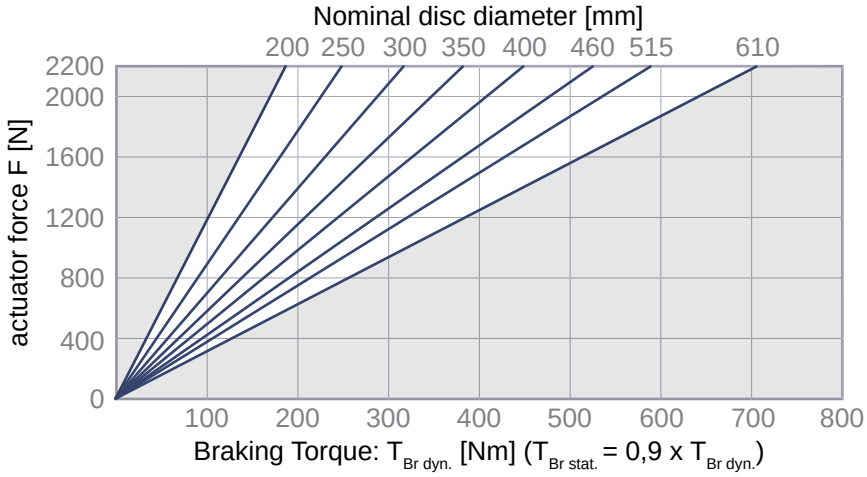

Mass: 9,3 kg

1 turn ≈ 260 N

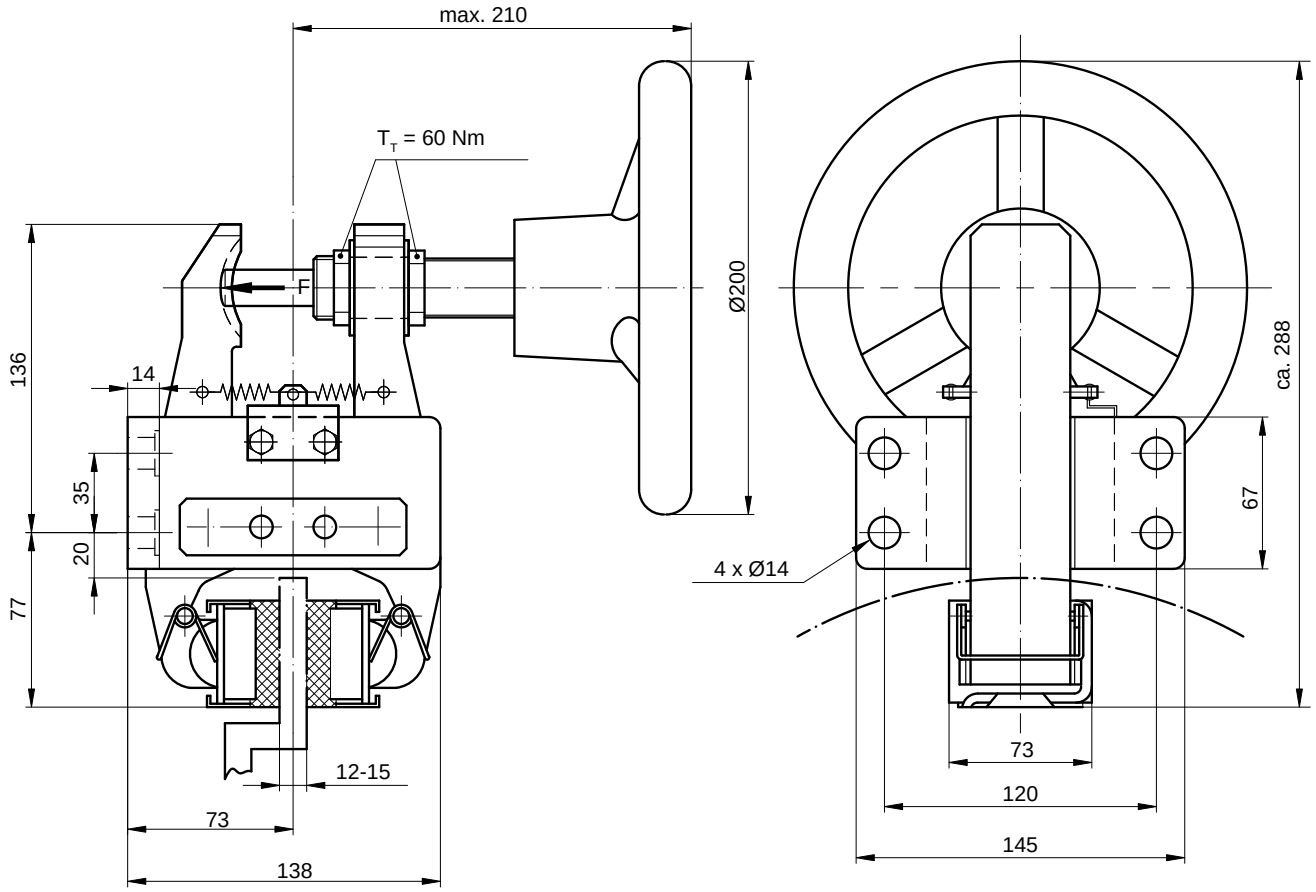

Mounting position is horizontal. Please get in touch if different.
A right hand mounted actuator is standard – „flange side“ mounted please state with order.

Brake Type R&H 200.099.01

mechanically actuated

Part-No.: 11236

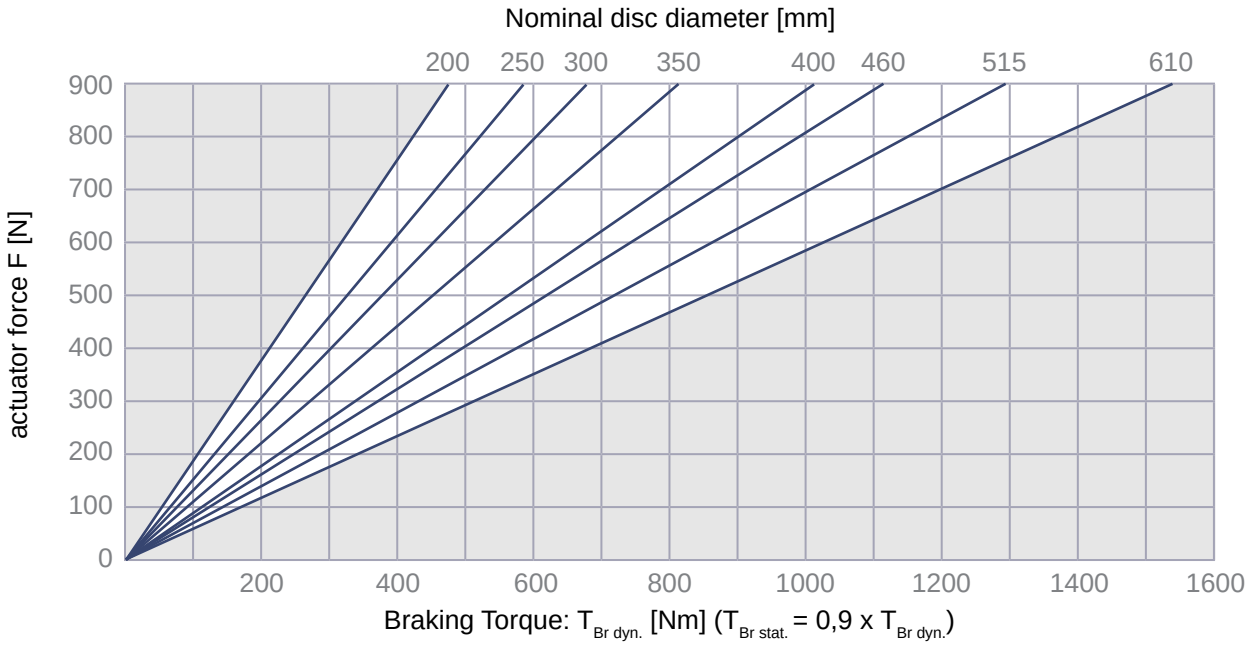

Mass: 8,6 kg

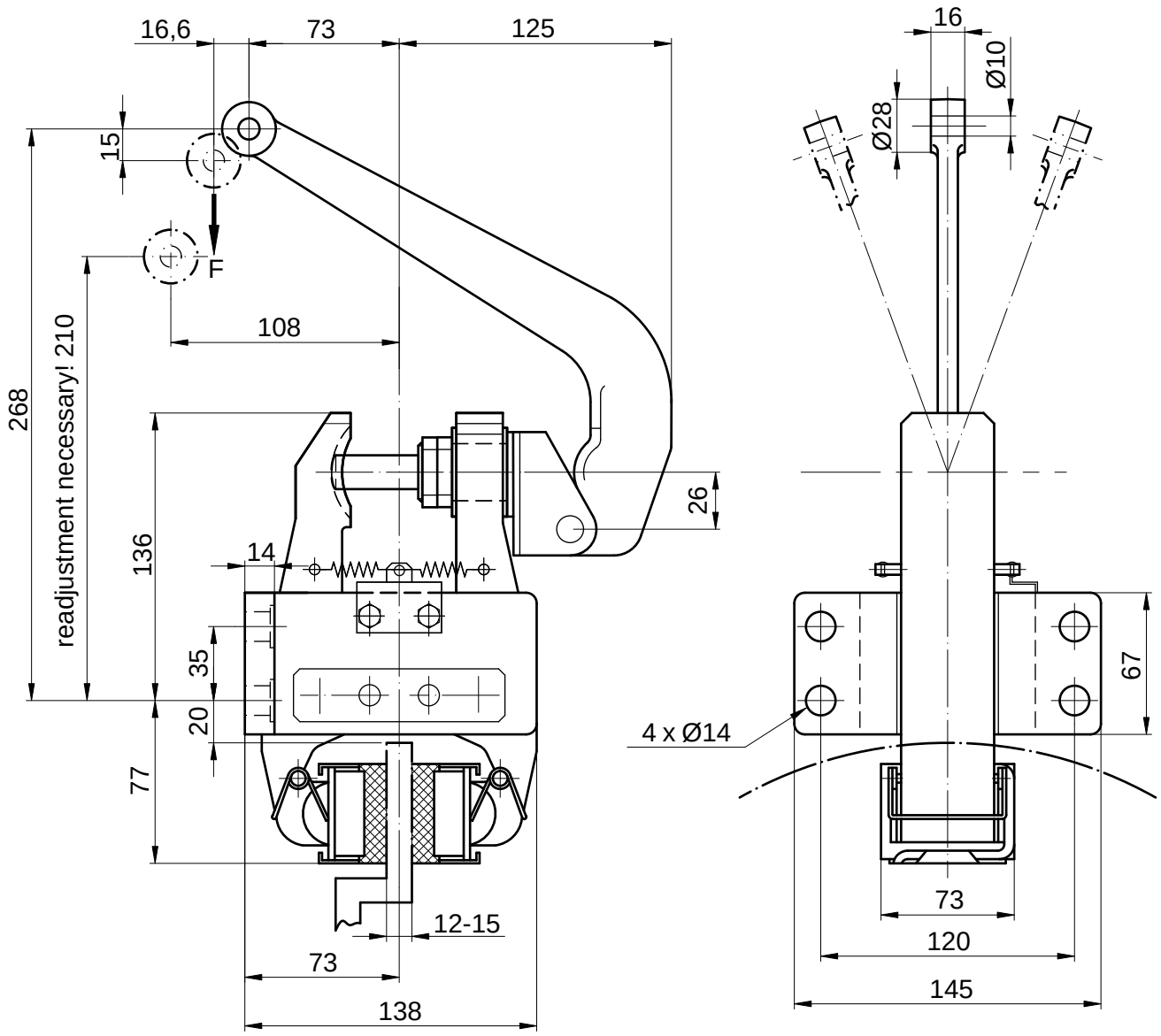

Mounting position is horizontal. Please get in touch if different.
A right hand mounted actuator is standard – „flange side“ mounted please state with order.

Brake Type R&H 2XX.098.01

hand operated

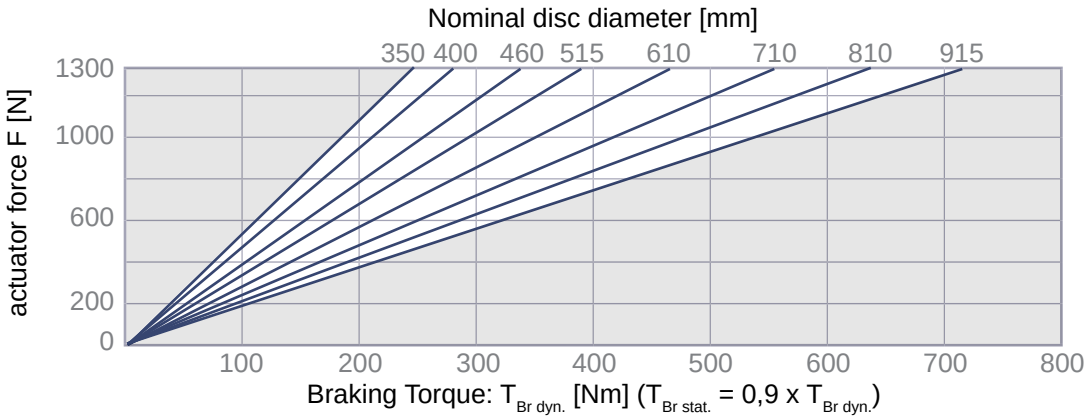

1 turn ≈ 160 N

Brake Type R&H 2XX.098.01

hand operated

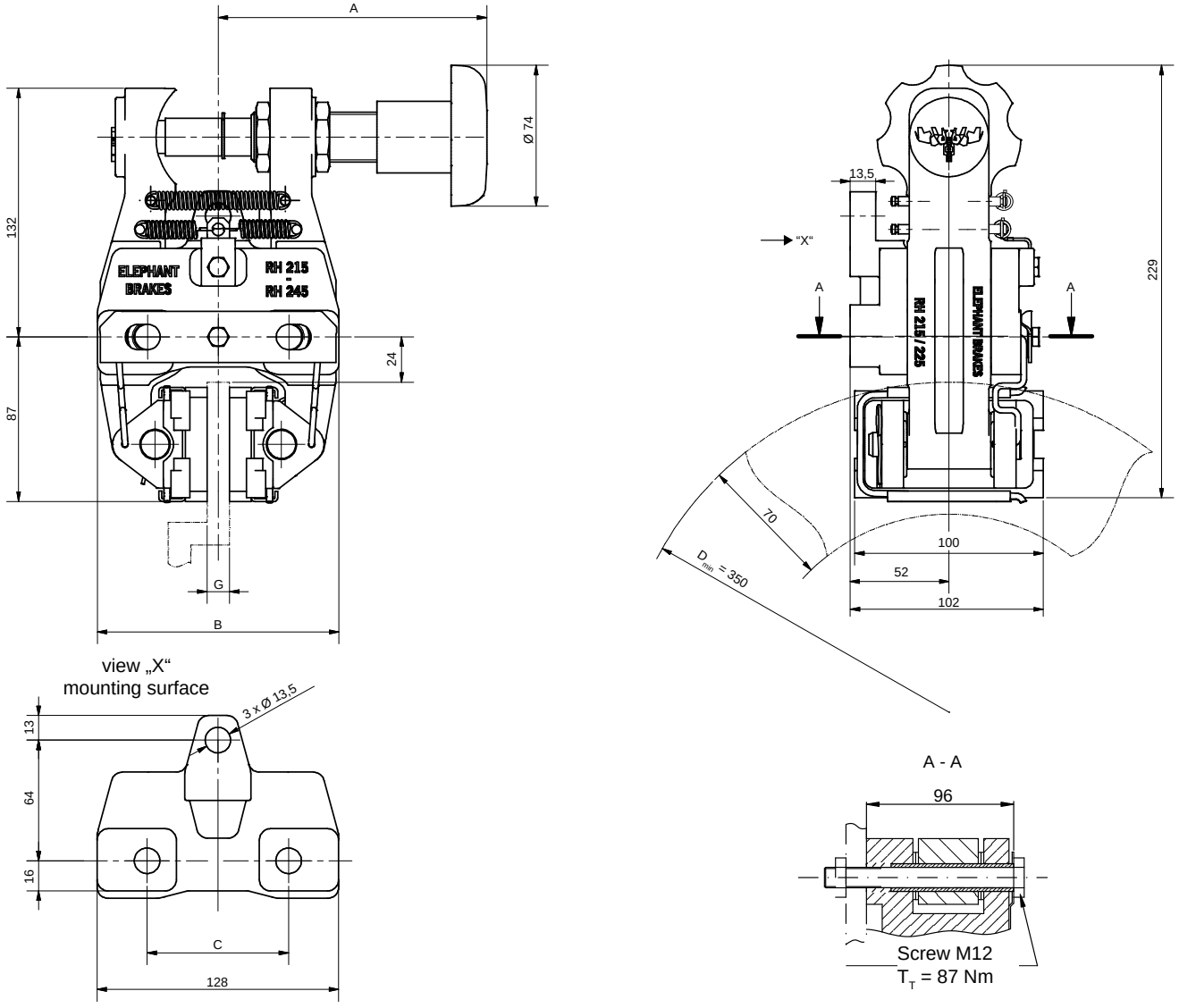

Mounting position is horizontal. Please get in touch if different.

A right hand mounted actuator is standard – left hand mounted please state with order.

Type	*Part-No.*	A [mm]	B [mm]	C [mm]	G [mm]	Mass [kg]
R&H 215.098.01	***10682***	144	130	75	12-15	8,3
R&H 225.098.01	***11141***	150	140	84	25,4	
R&H 230.098.01	***10702***	153	144	75	30	8,5

Brake Type R&H 2XX.099.01

mechanically actuated

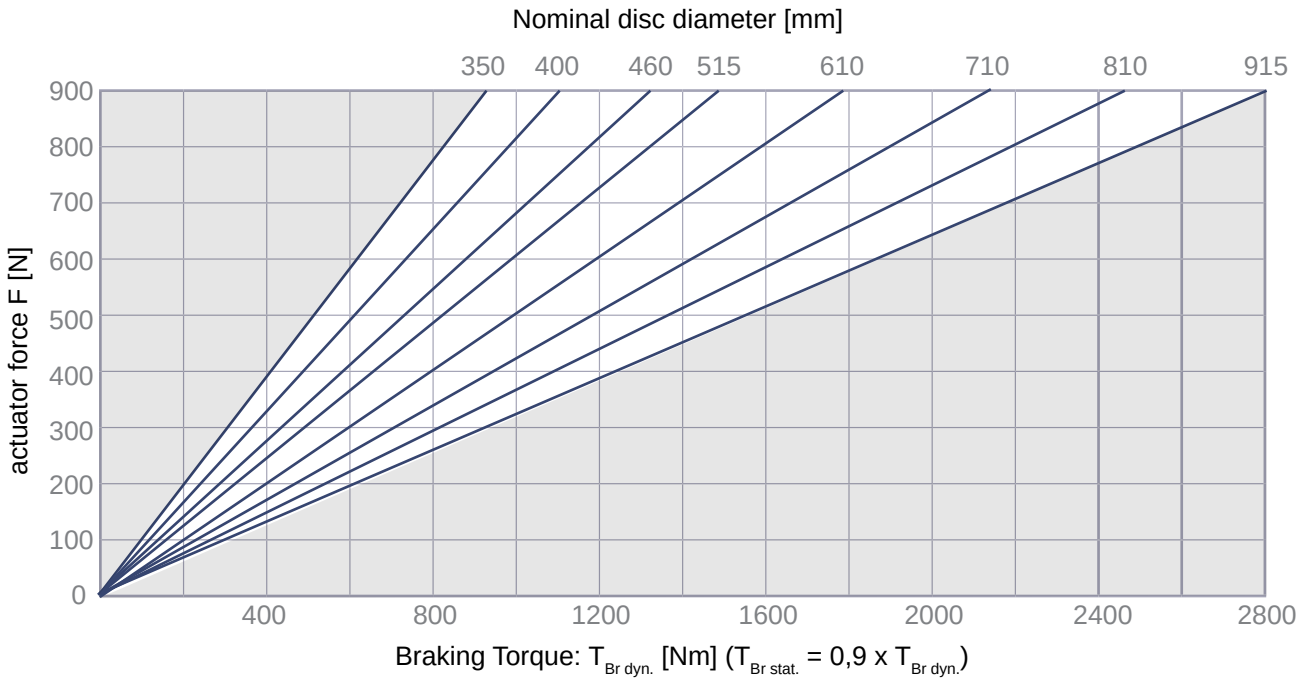

Brake Type R&H 2XX.099.01

mechanically actuated

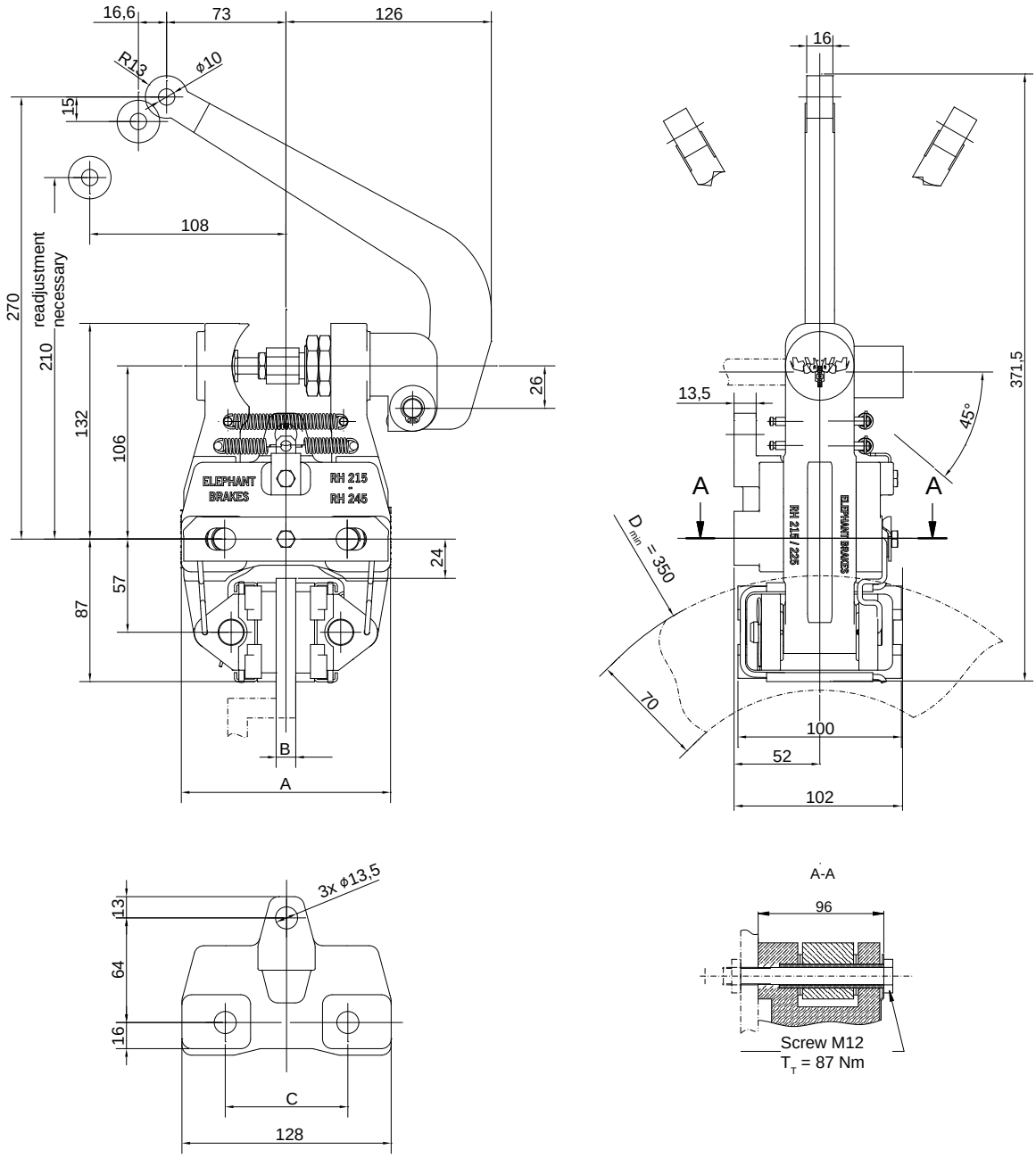

Mounting position is horizontal. Please get in touch if different.

A right hand mounted actuator is standard – left hand mounted please state with order.

Type	Part-No.	A [mm]	B [mm]	C [mm]	Mass [kg]
R&H 215.099.01	10681	130	12-15	75	9,1
R&H 225.099.01	11112	140	25,4	84	
R&H 230.099.01	10701	144	30	75	9,3
R&H 245.099.01	13246	154	45	84	

Brake Type R&H 250.098.01

hand operated

Part-No.: 10069

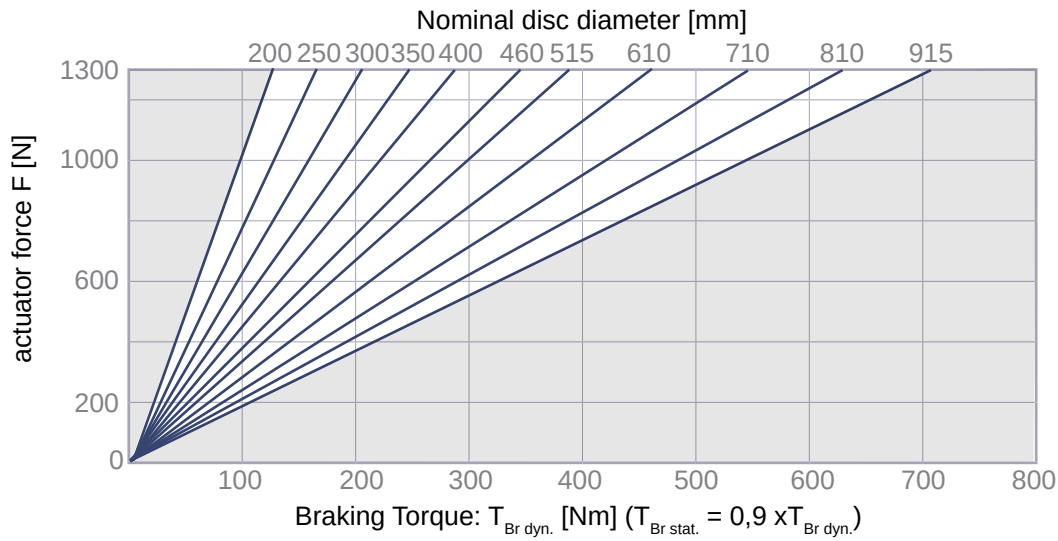

Mass: 7,1 kg

1 turn ≈ 160 N

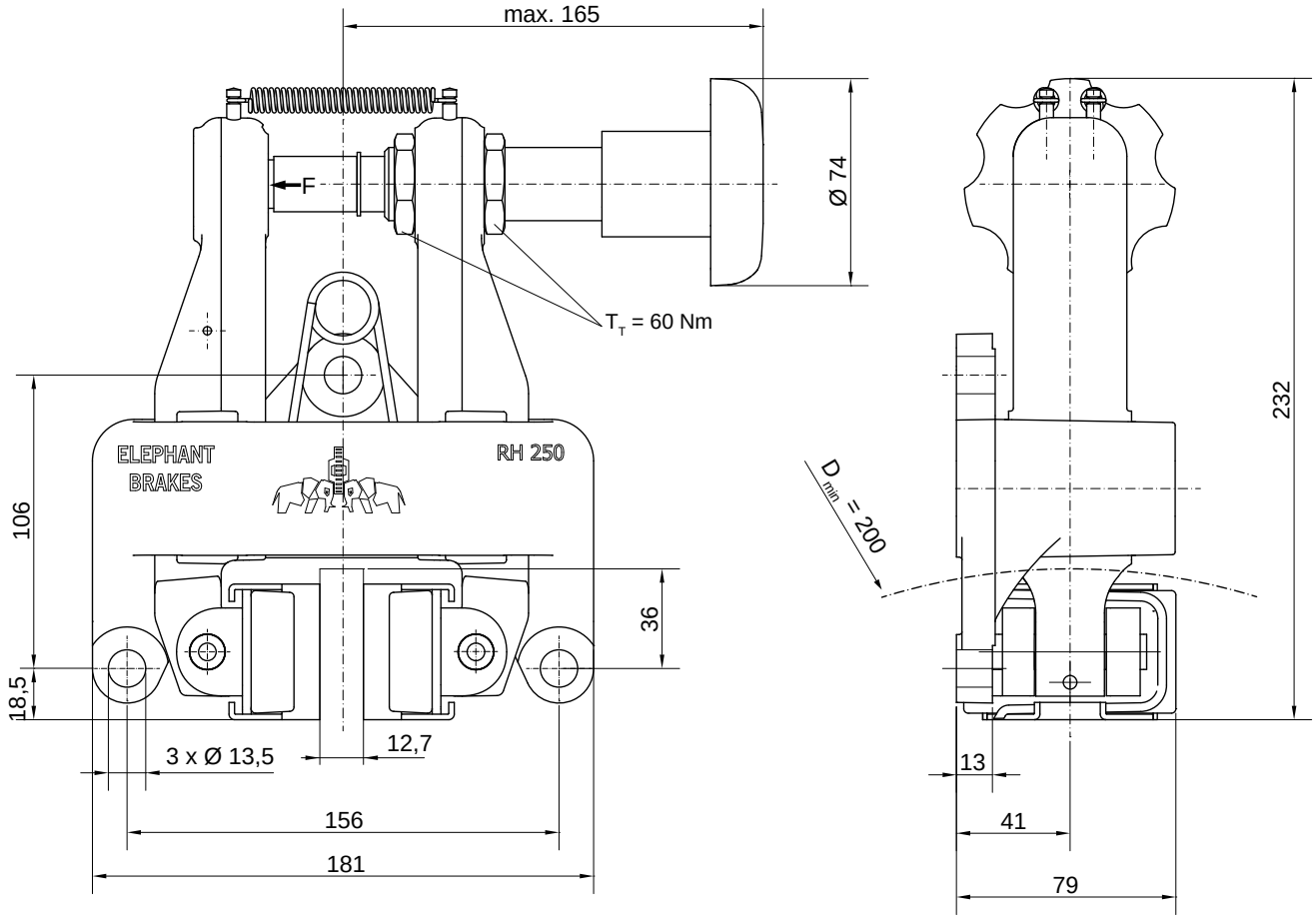

Mounting position is horizontal. Please get in touch if different.

A right hand mounted actuator is standard – left hand mounted please state with order.

Brake Type R&H 250.099.01

mechanically actuated

Part-No.: 10063

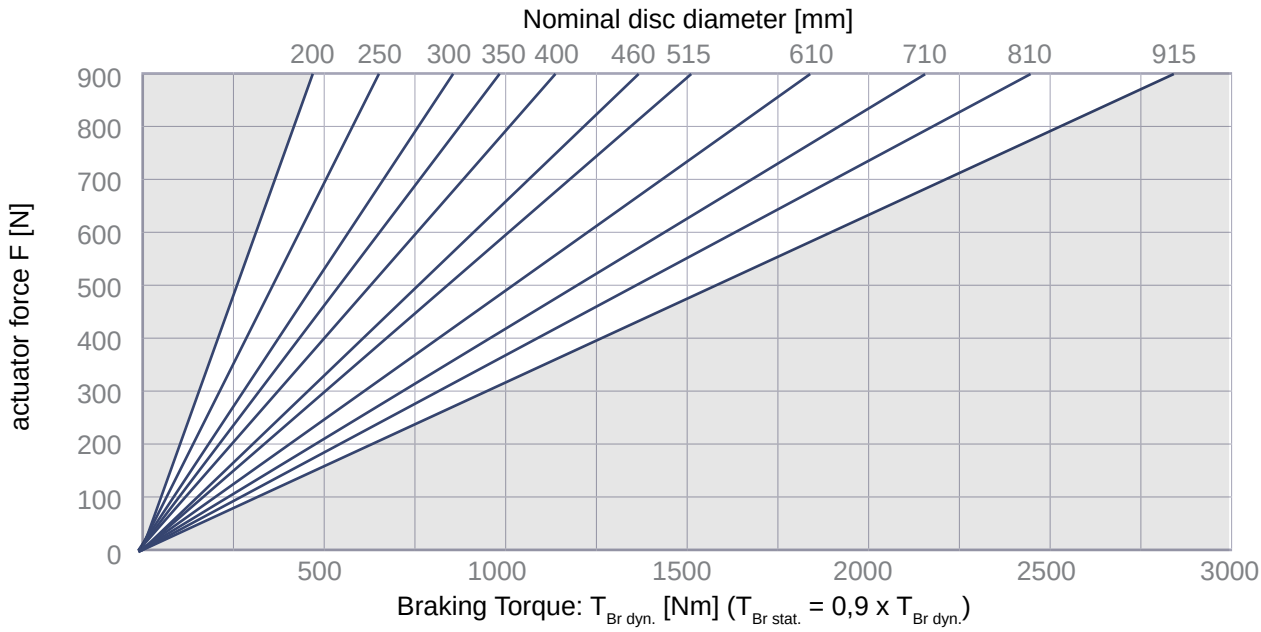

Mass: 7,9 kg

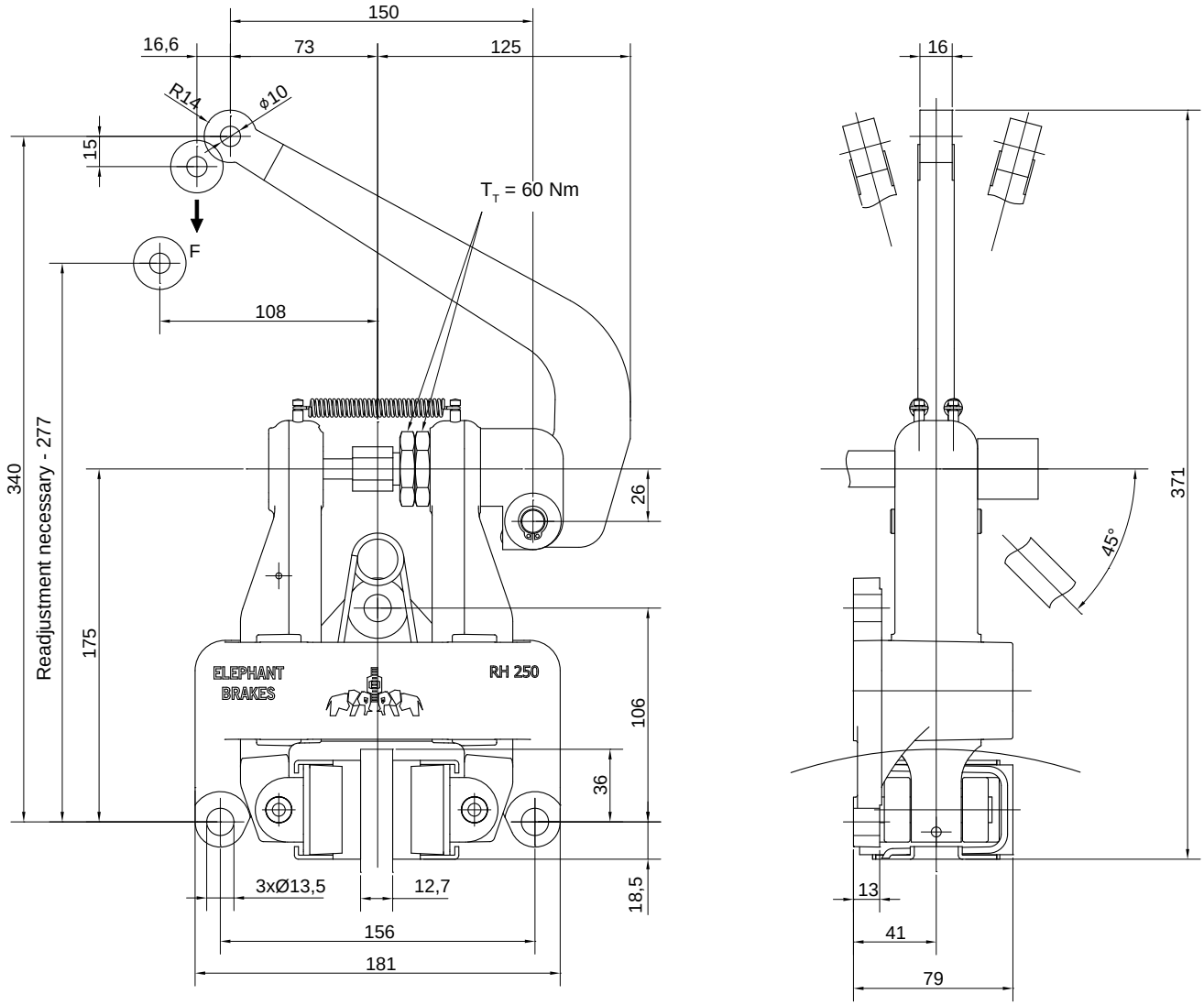

Mounting position is horizontal. Please get in touch if different.

A right hand mounted actuator is standard – left hand mounted please state with order.

Brake Type R&H 250.096.01

hand operated

Part-No.: 12422

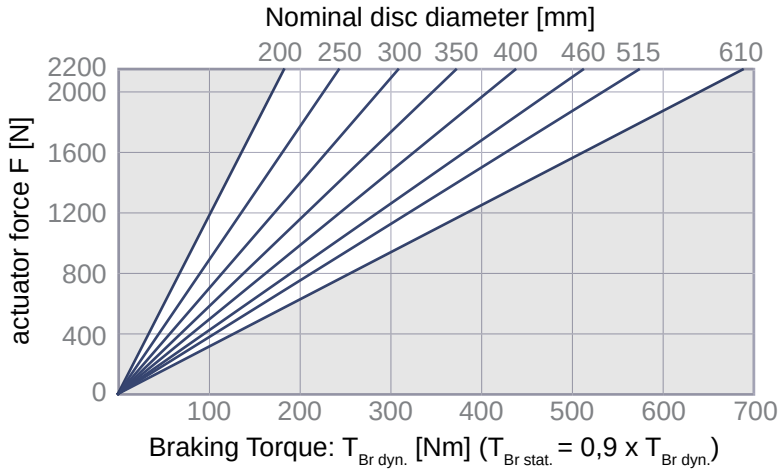

Mass: 8 kg

1 turn ≈ 260 N

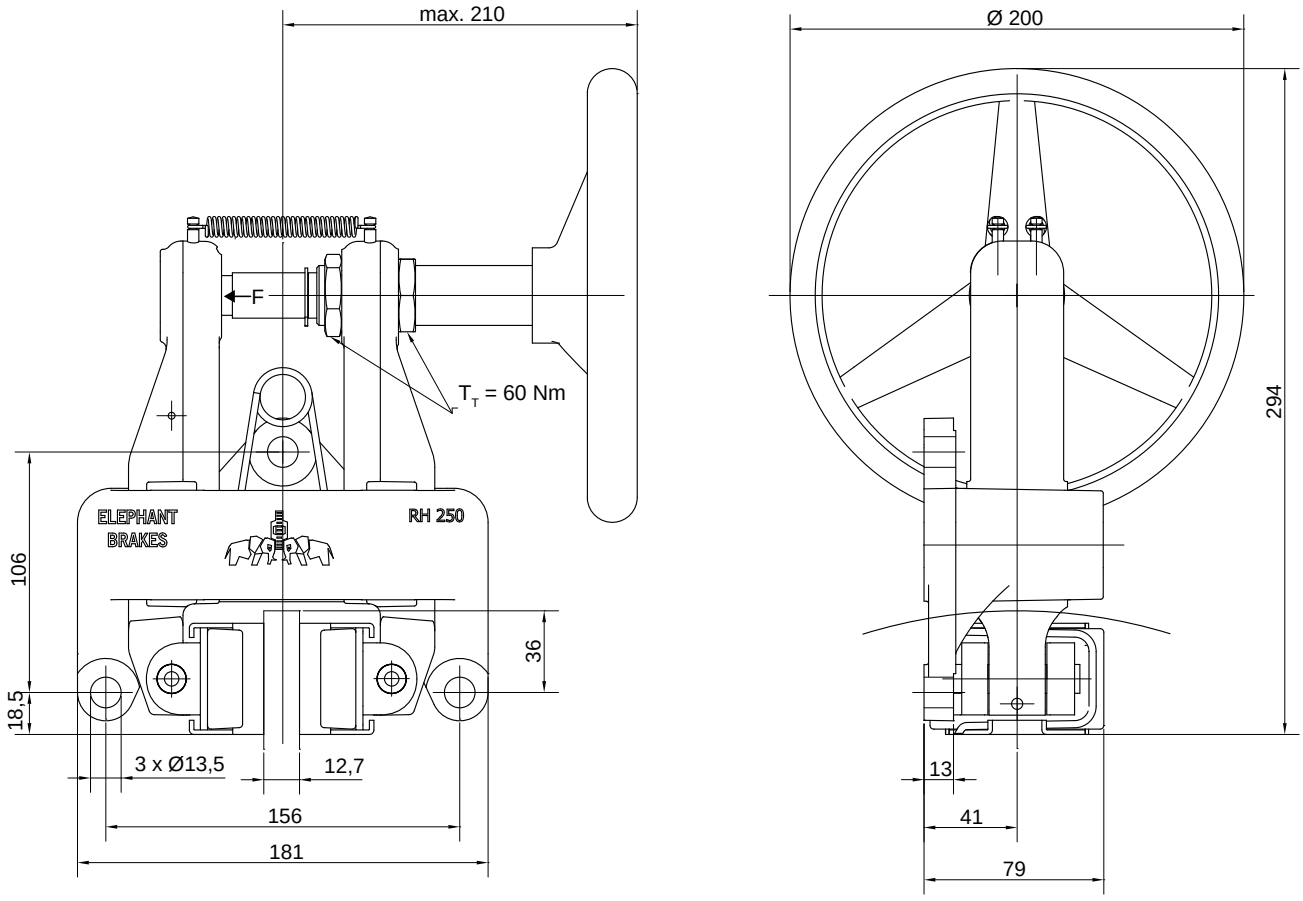

Mounting position is horizontal. Please get in touch if different.

A right hand mounted actuator is standard – left hand mounted please state with order.

Brake Type R&H 300.096.04

hand operated

Part-No.: 13748

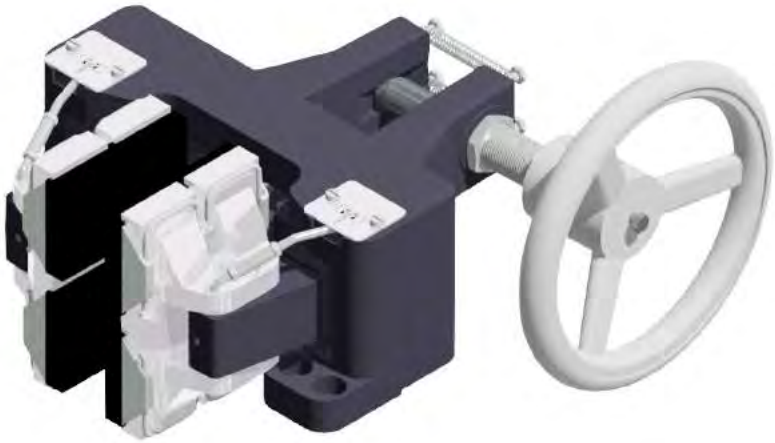

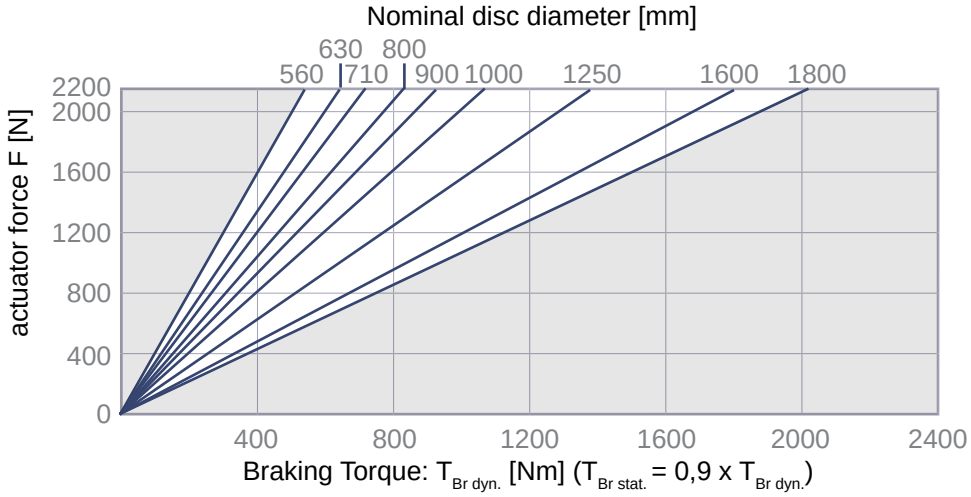

Mass: 21 kg

1 turn ≈ 260 N

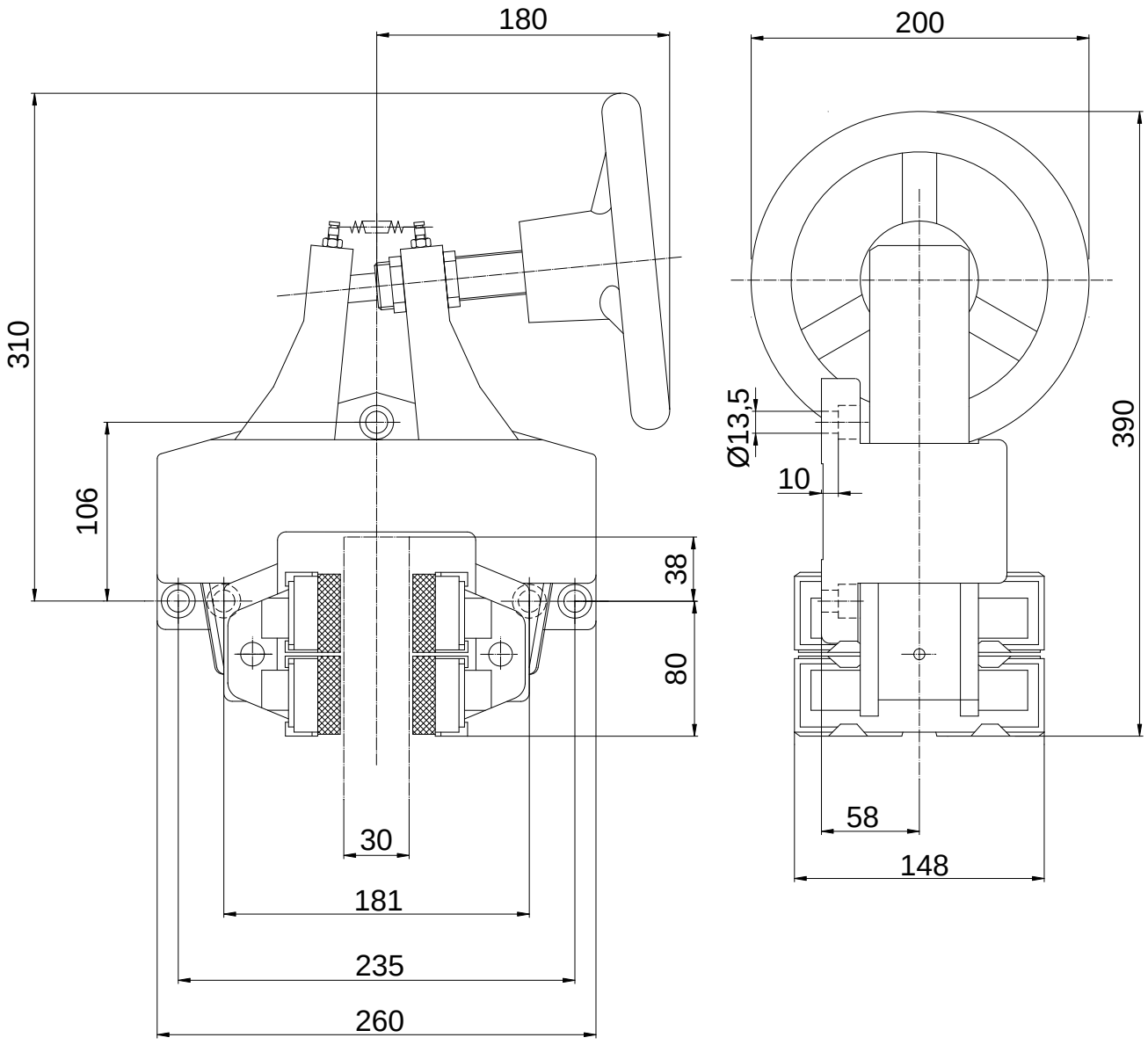

Mounting position is horizontal. Please get in touch if different.

A right hand mounted actuator is standard – left hand mounted please state with order.

ELEPHANT BRAKES BY RIETSCHOTEN

Brake Type R&H 350.090.01

hand operated

Part-No.: 12757

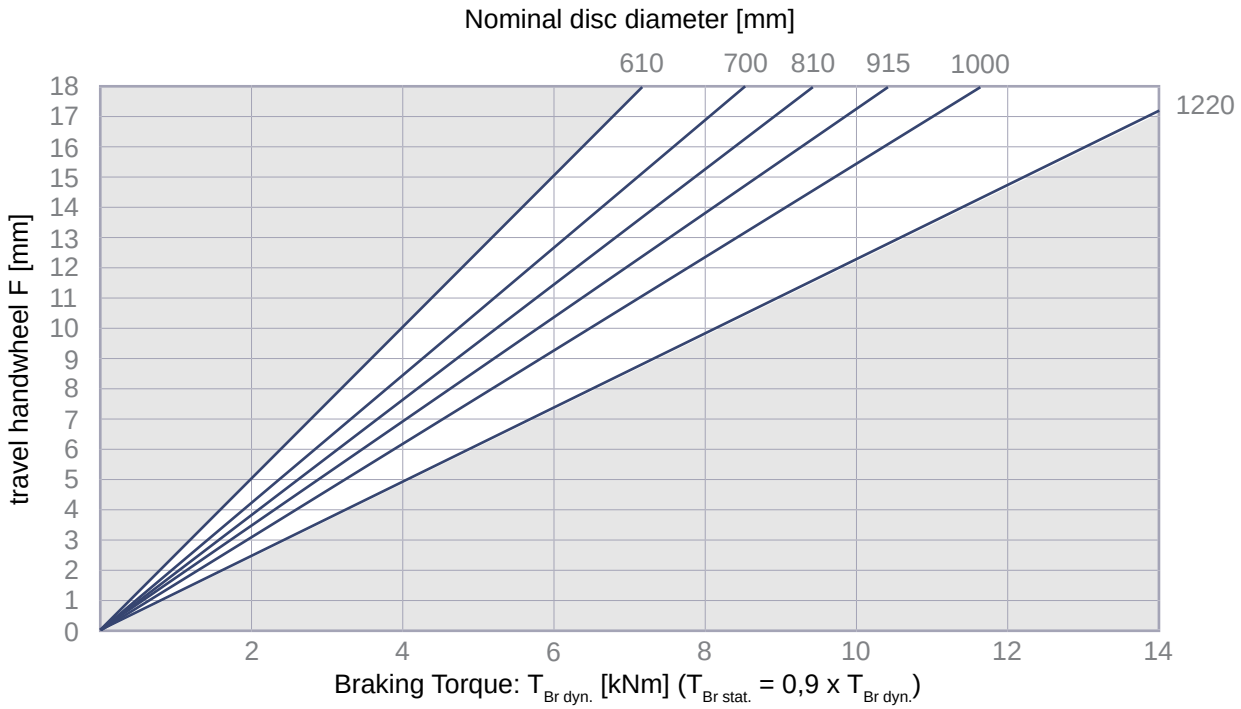

Mass: 55,5 kg

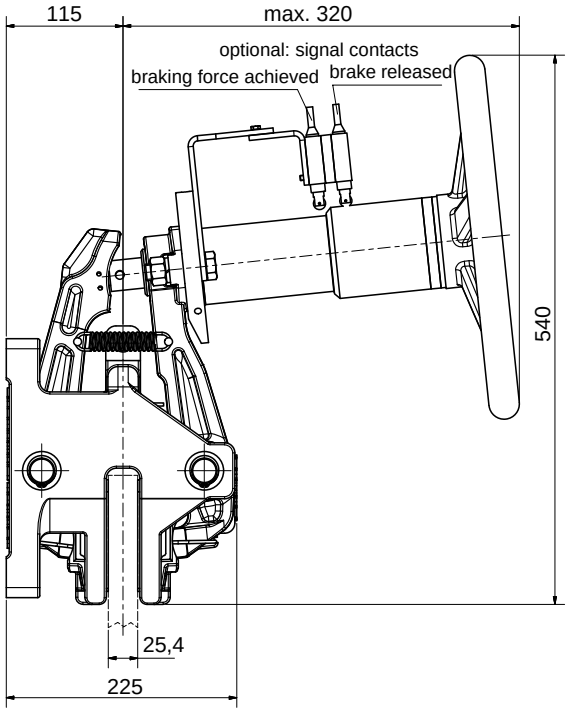

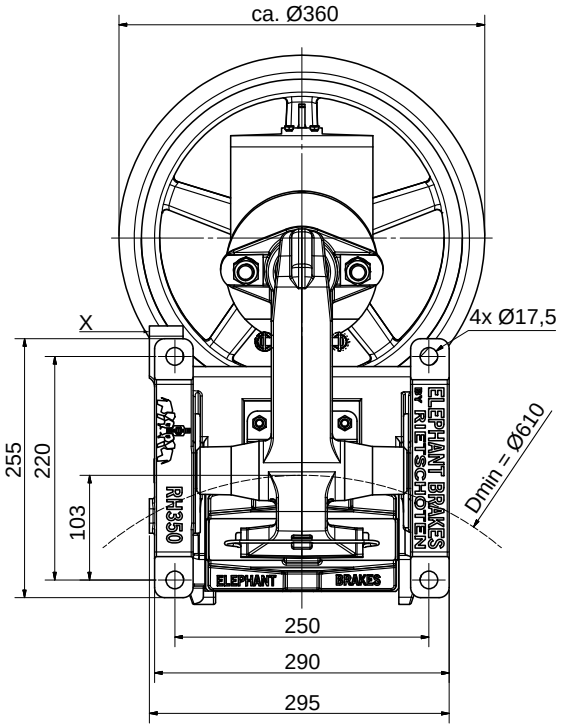

view „X“
mounting surface

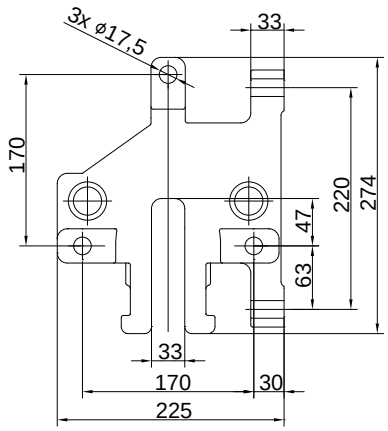

Mounting position is horizontal. Please get in touch if different.

A right hand mounted actuator is standard – left hand mounted please state with order.

PERKINS

pneumatically applied brakes

Brake Type EB 025 / EB 030

pneumatically applied

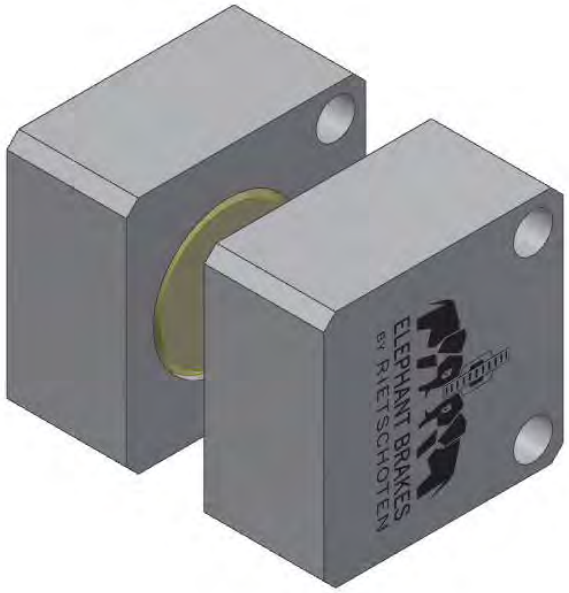

EB 025

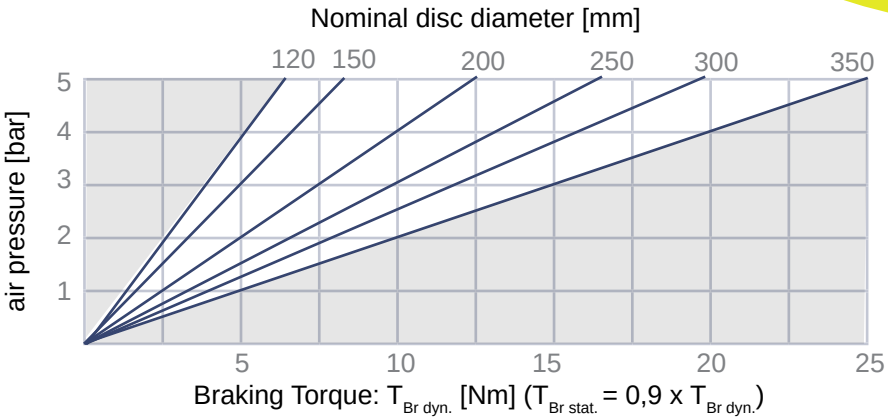

EB 030

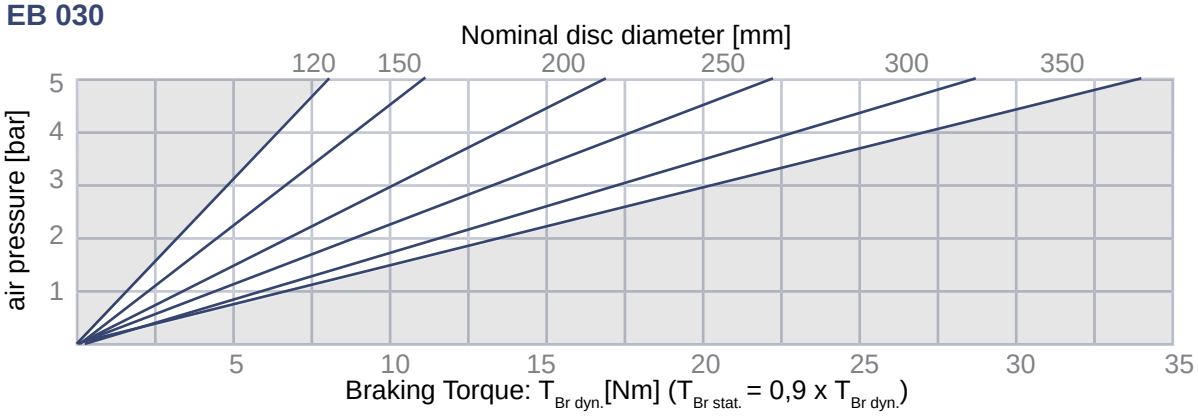

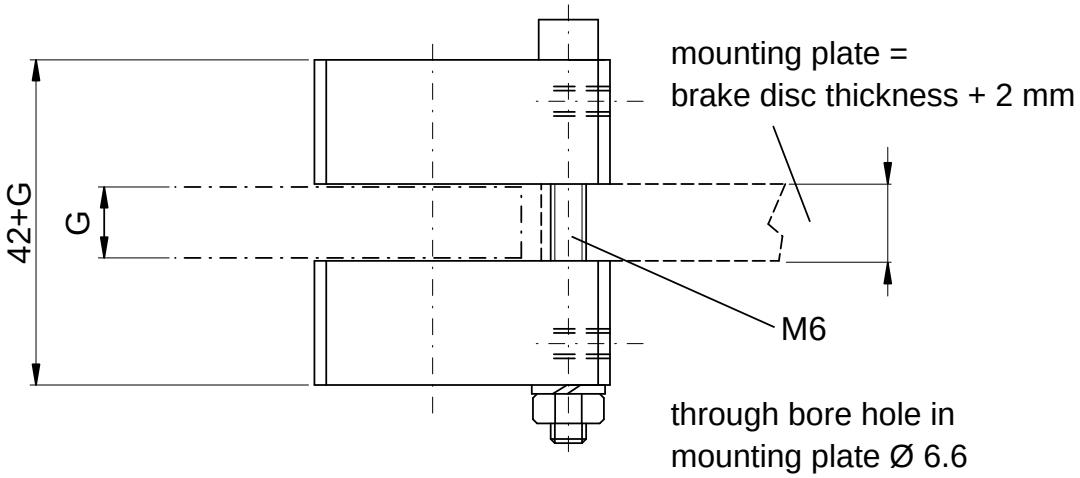

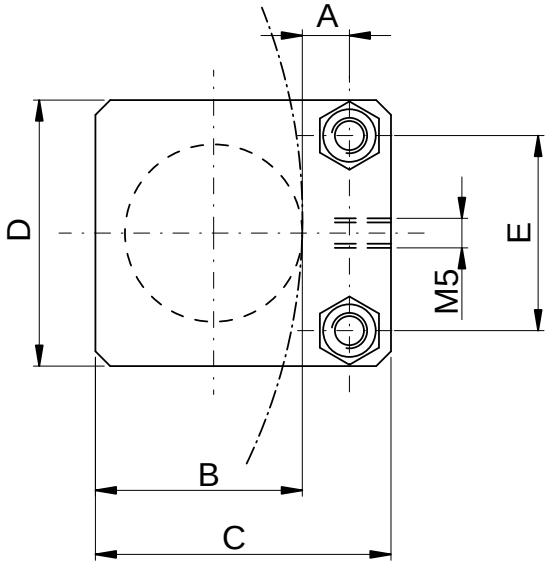

Type	*Part-No.*	A [mm]	B [mm]	C [mm]	D [mm]	E [mm]	Mass [kg]
EB 025	***10927***	6	29	40	40	30	0,14
EB 030	***11471***	8	35	50	45	33	0,15

Brake Type EB 108 / EB 115

pneumatically applied

NOTE:
Also hydraulically applied usable.
See page 123

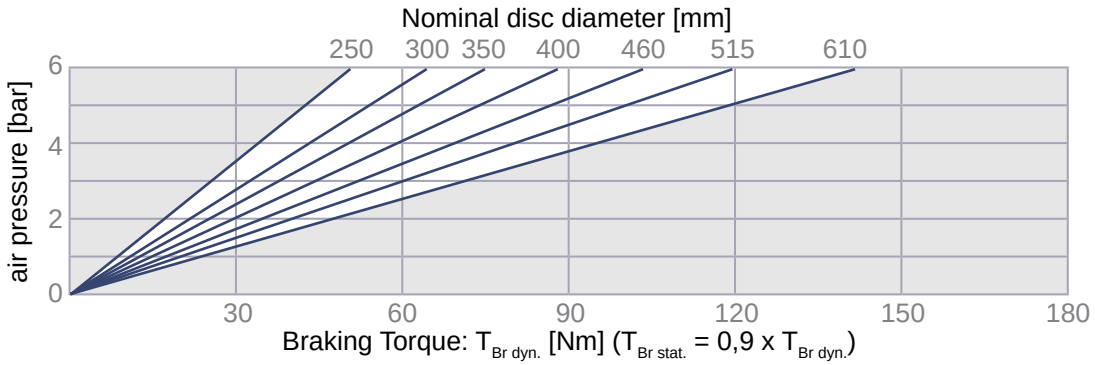

p_{max}: 8 bar
hydraulically applied $p_{max.}$: 20 bar

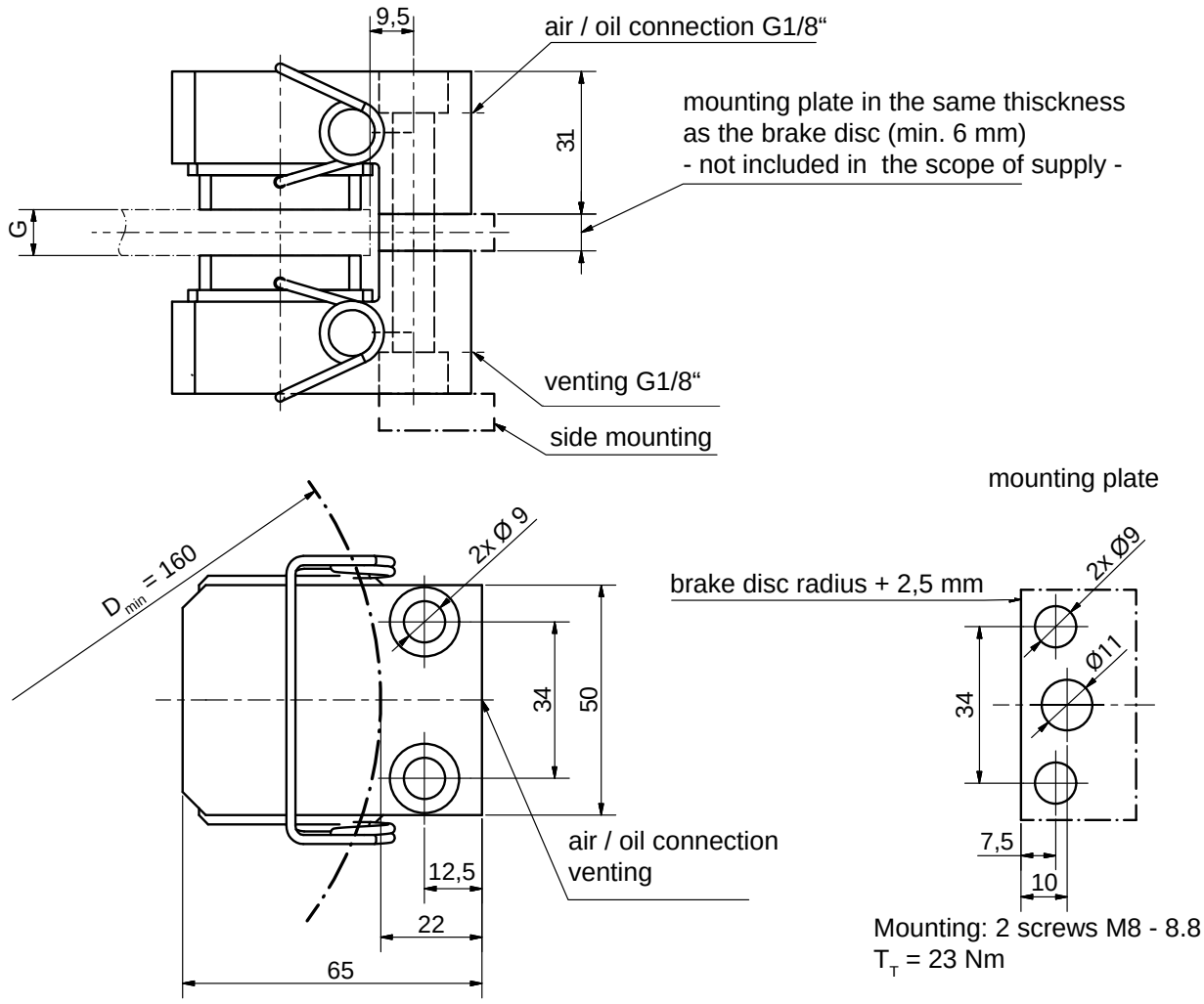

For G = 8 mm: EB 108, ***Part-No. 12294***
For G = 15 mm: EB 115, ***Part-No. 10811***

Further disc thicknesses and mounting plates for side mounting on request

Brake Type R&H 051.100.XX

pneumatically applied

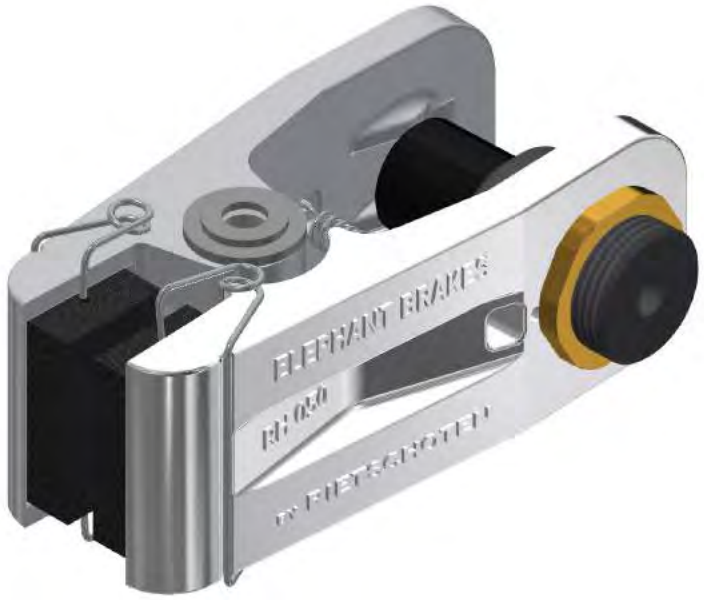

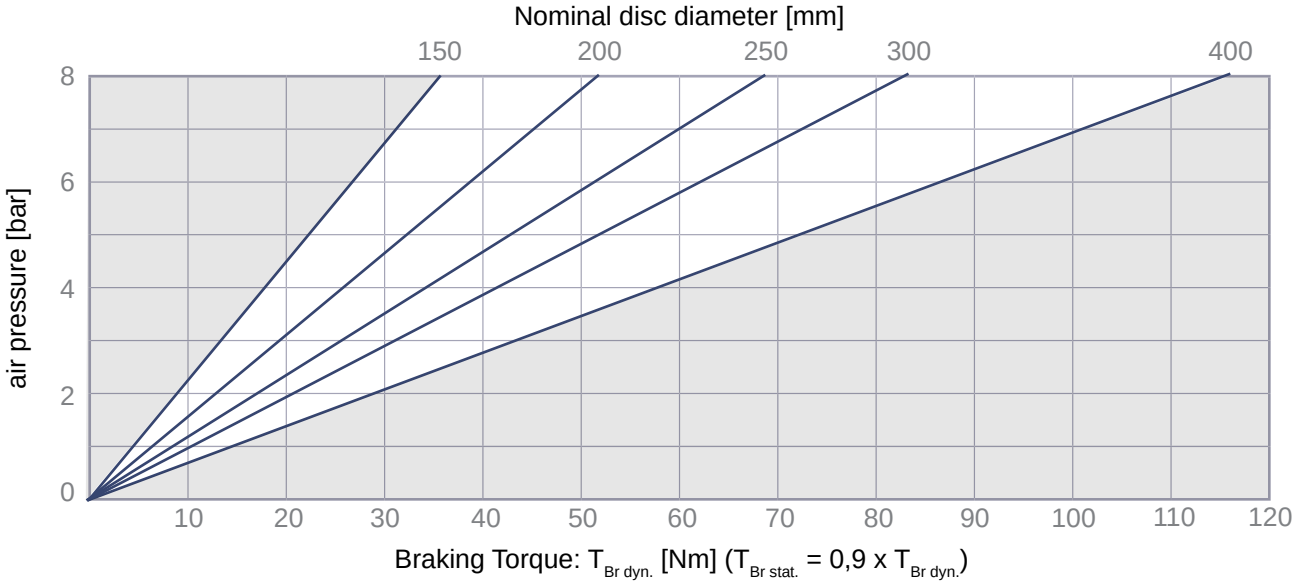

Mass: 1 kg

V / stroke: 0,02 dm³

Brake Type R&H 051.100.XX

pneumatically applied

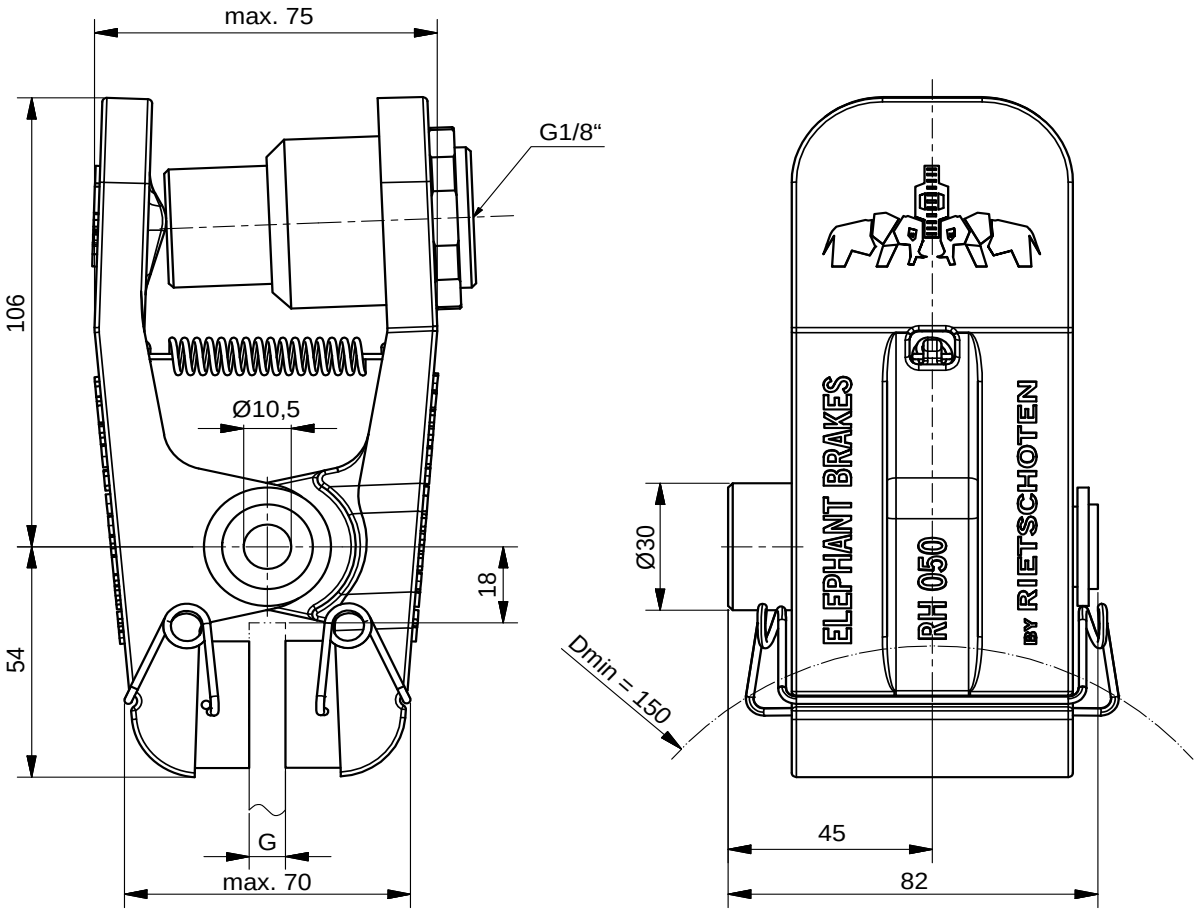

Mounting position is horizontal. Please get in touch if different.

A right hand mounted thruster is standard – left hand mounted please state with order.

Type	*Part-No.*	G [mm]
R&H 051.100.08	***12504***	8
R&H 051.100.13	***12934***	12,7

Brake Type R&H 050.10X.01

pneumatically applied

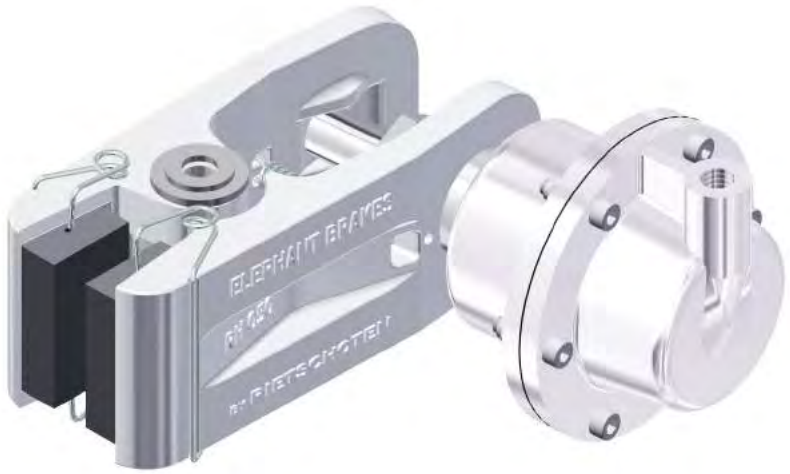

R&H 050.102.01

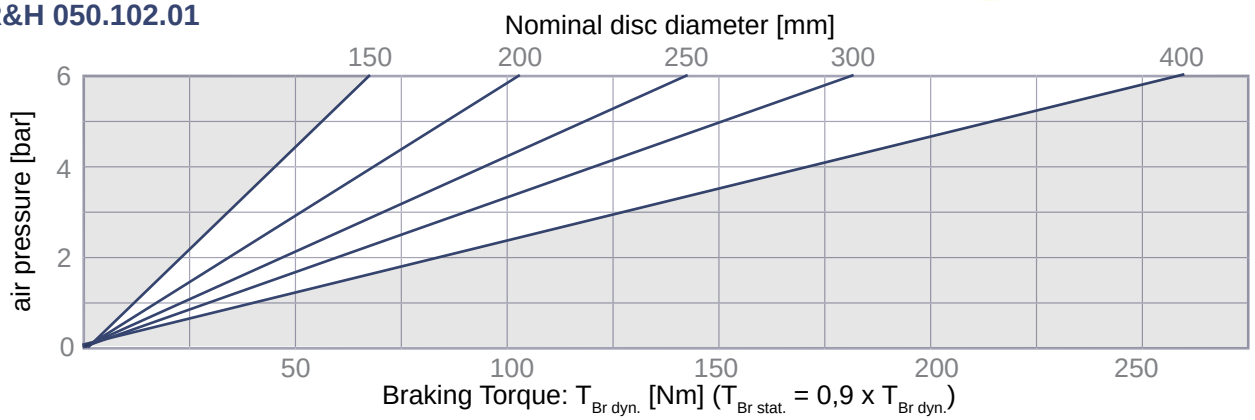

R&H 050.103.01

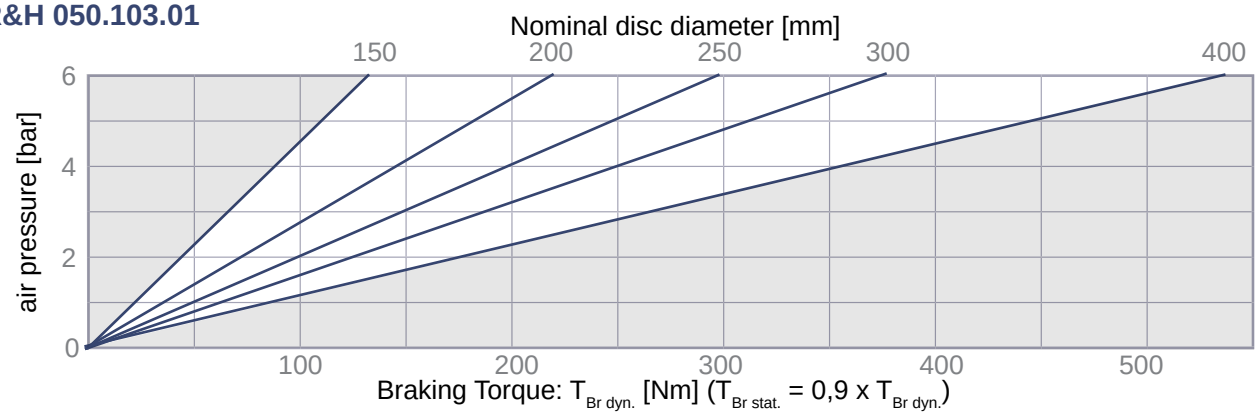

Brake Type R&H 050.10X.01

pneumatically applied

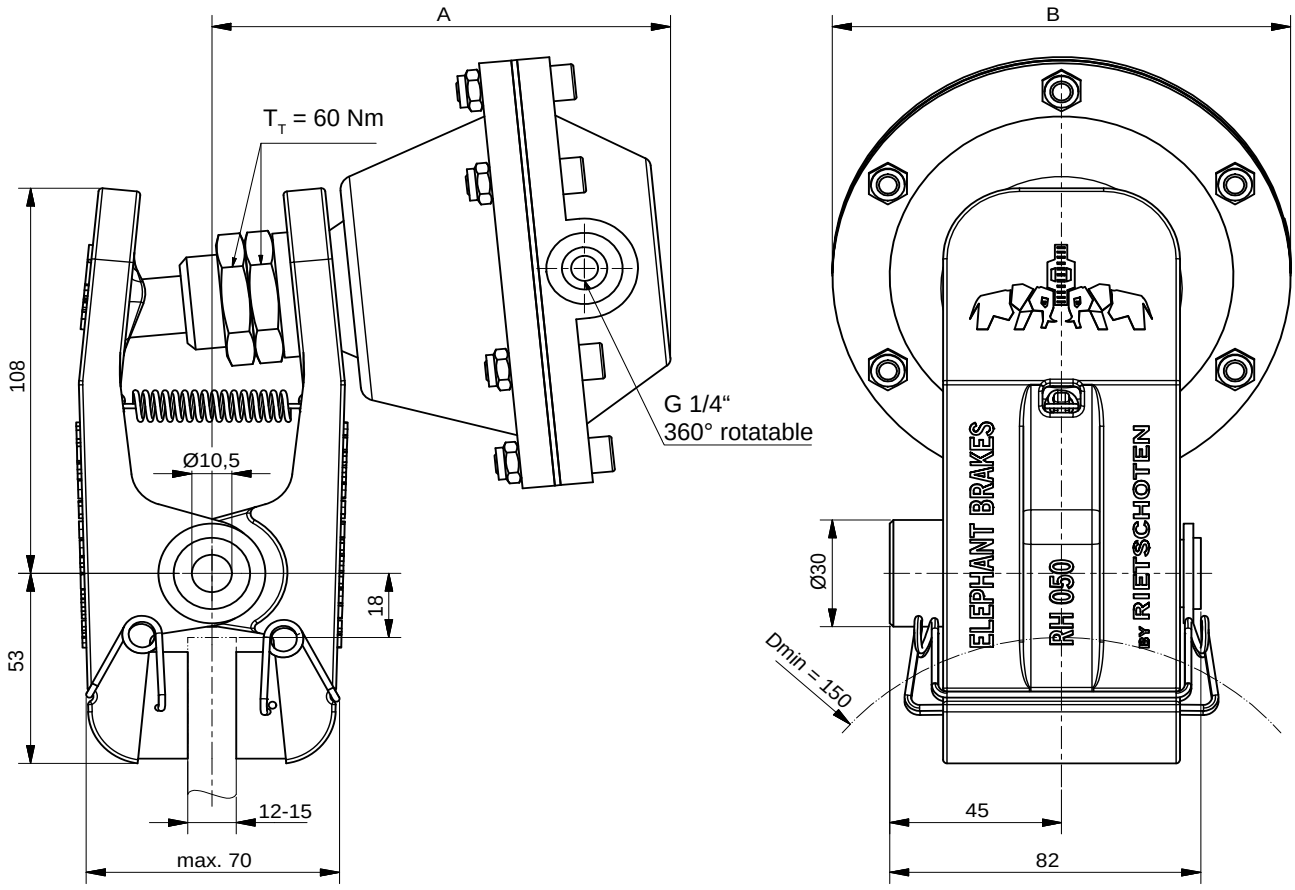

Mounting position is horizontal. Please get in touch if different.
A right hand mounted thruster is standard – left hand mounted please state with order.

Type	*Part-No.*	A [mm]	Ø B [mm]	V / stroke [dm³]	Mass [kg]
R&H 050.102.01	***11230***	145	97	0,07	1,7
R&H 050.103.01	***11093***	120	120	0,15	2

Brake Type R&H 100.10X.01

pneumatically applied

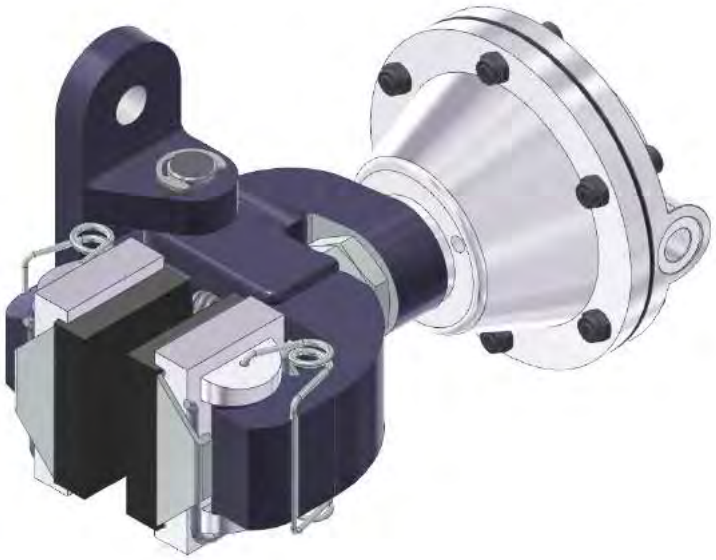

R&H 100.101.01

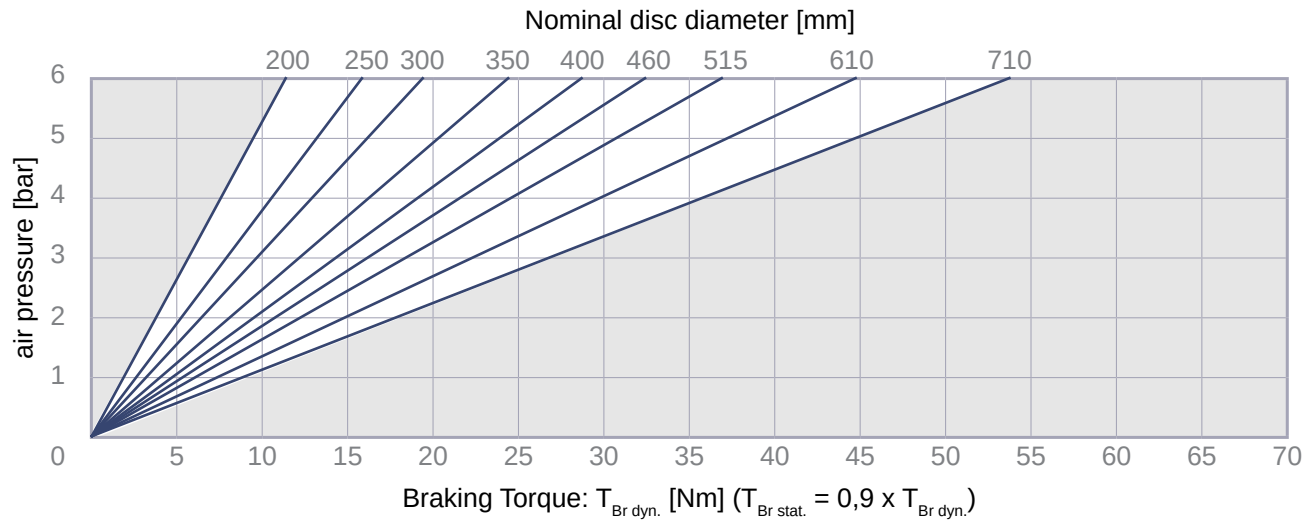

R&H 100.102.01

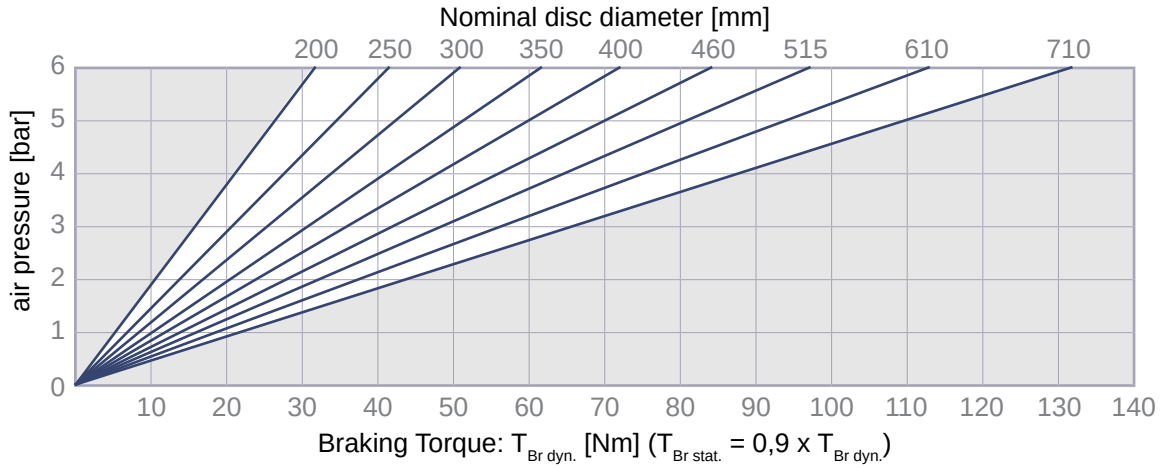

R&H 100.103.01

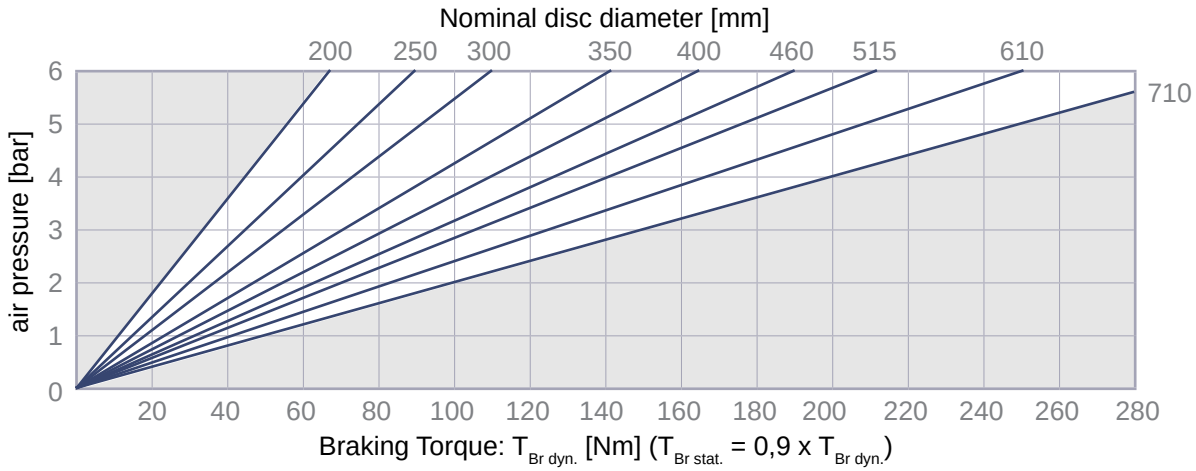

R&H 100.105.01

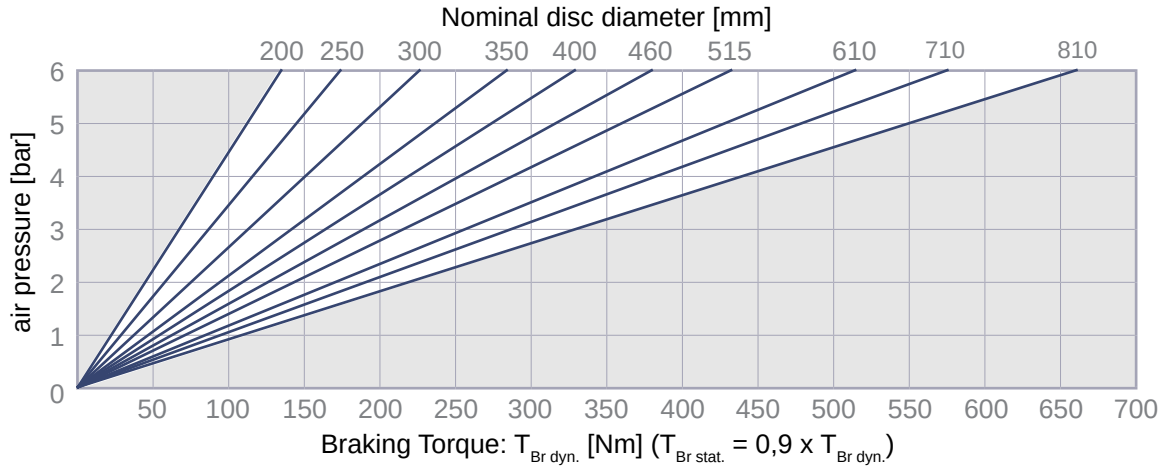

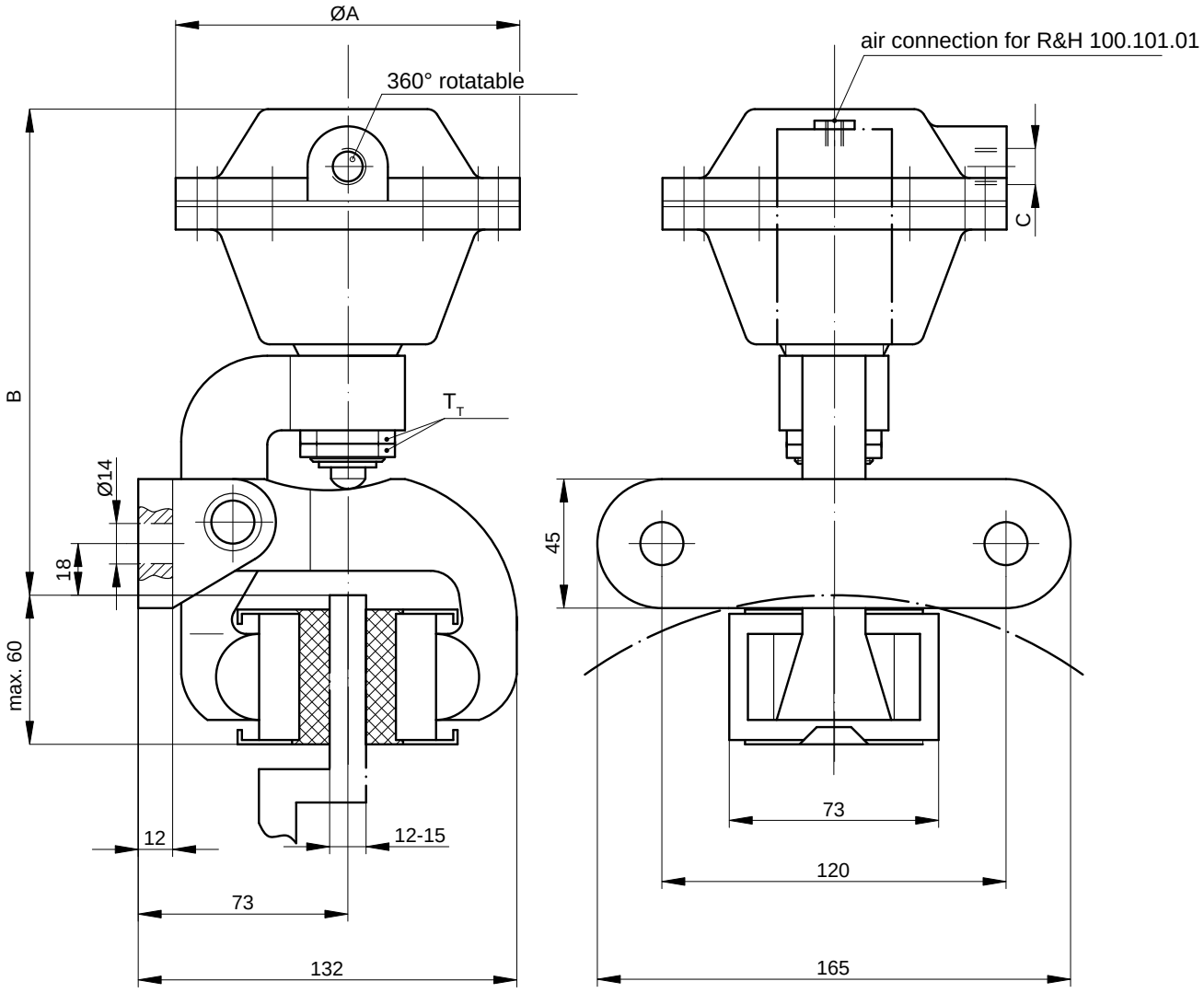

Mounting position is horizontal. Please get in touch if different.

Type	Part-No.	Mass [kg]	ØA [mm]	B [mm]	C	V / stroke [dm³]	T_T [Nm]
R&H 100.101.01	10389	3,1	40	170	G1/4“	0,04	60
R&H 100.102.01	10390	3,6	97	185		0,07	
R&H 100.103.01	10388	4	120	175		0,15	
R&H 100.105.01	10386	4,3	144	180	G3/8“	0,30	

Brake Type R&H 100.10X.02

pneumatically applied

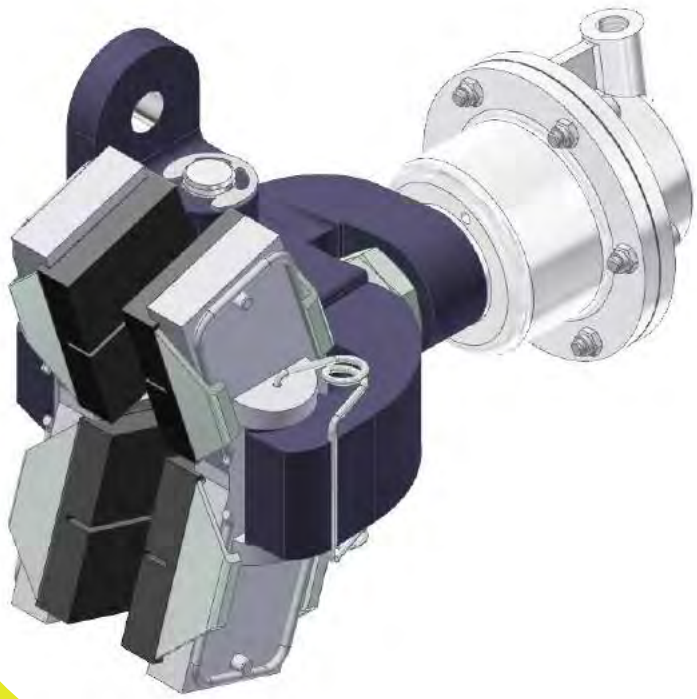

R&H 100.101.02

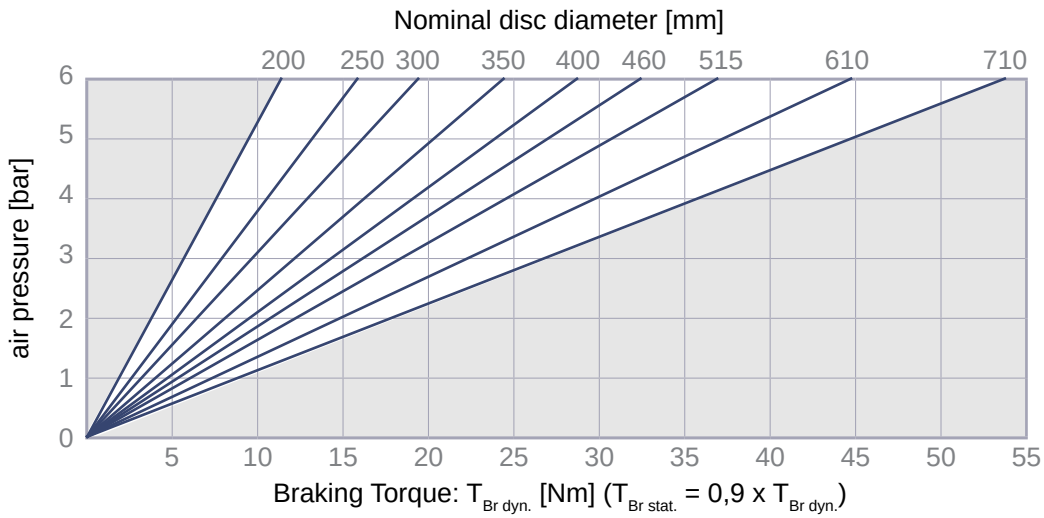

R&H 100.102.02

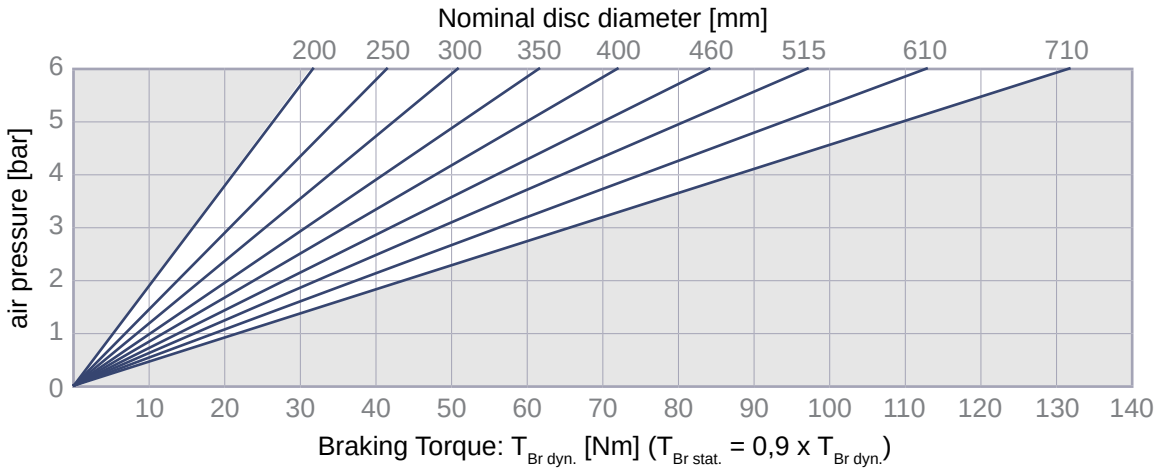

R&H 100.103.02

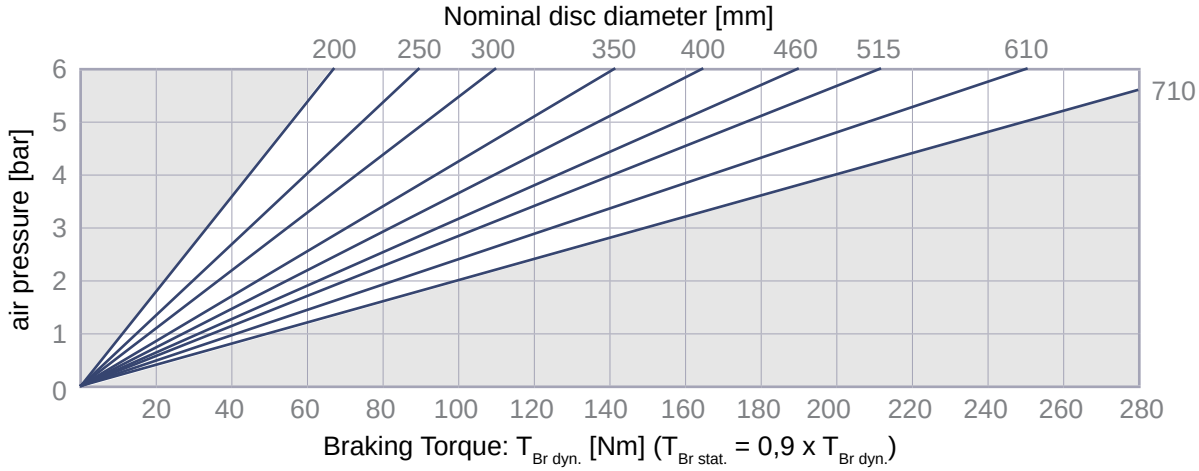

R&H 100.105.02

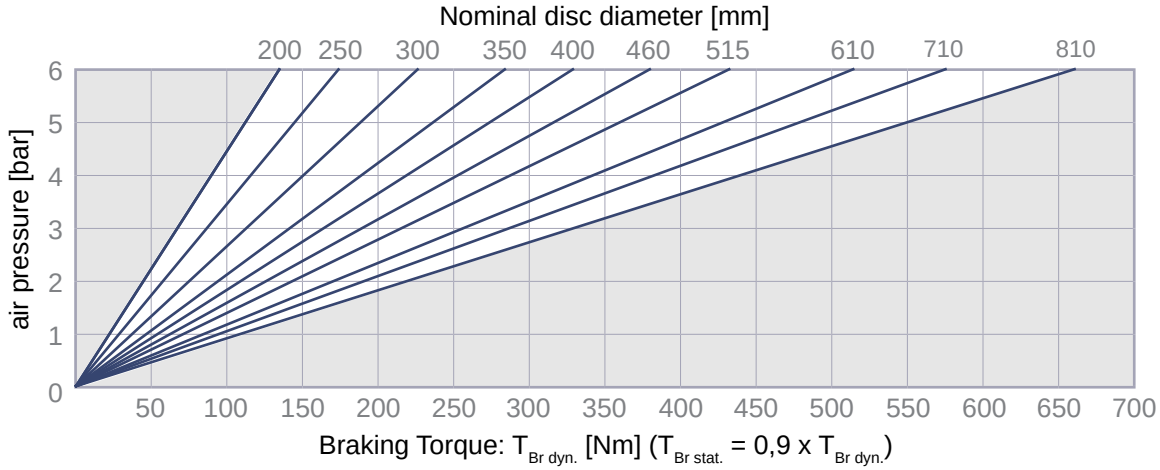

Brake Type R&H 100.10X.02

pneumatically applied

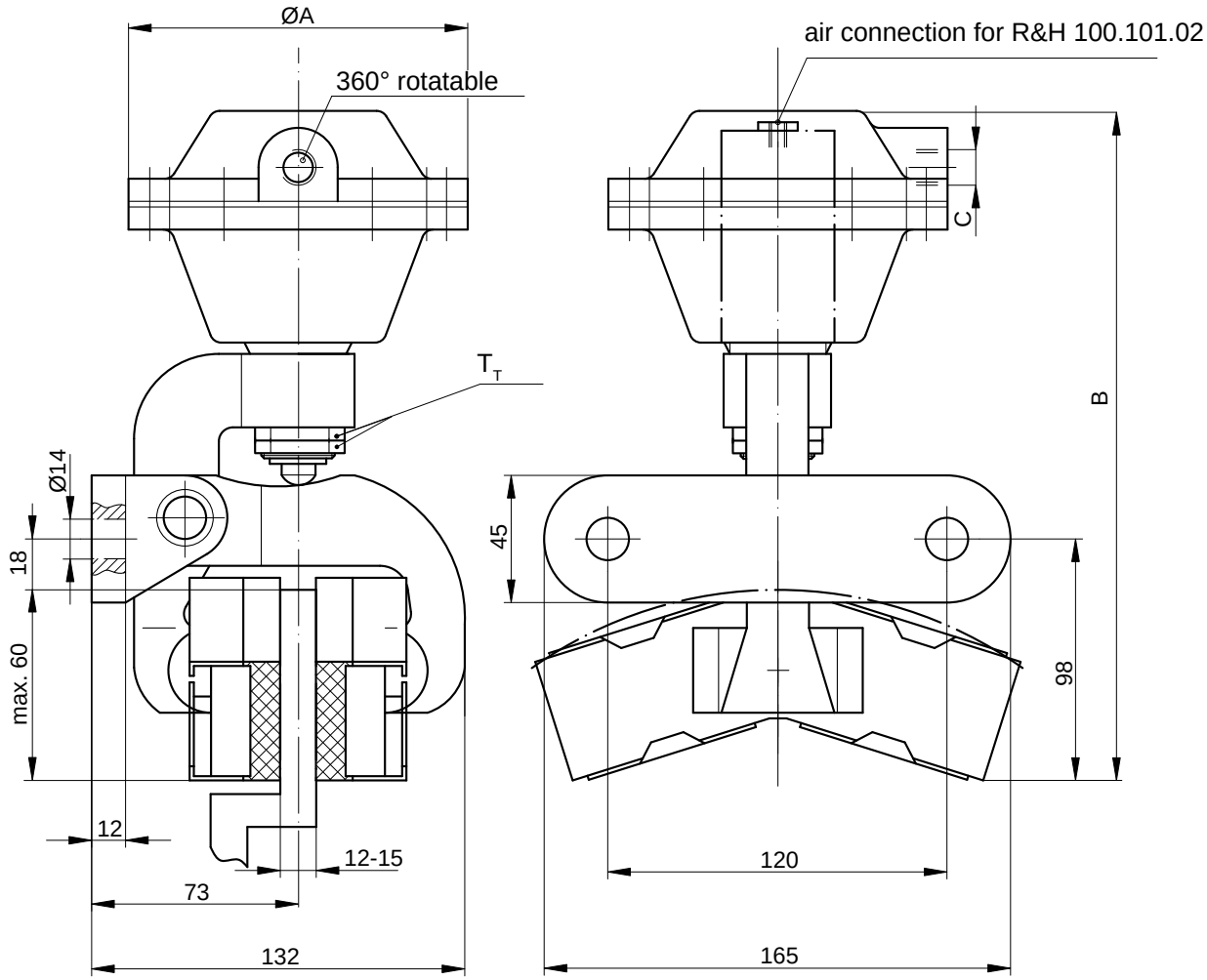

Mounting position is horizontal. Please get in touch if different.

Type	Part-No.	Mass [kg]	ØA [mm]	B [mm]	C	V/stroke [dm³]	T_T [Nm]
R&H 100.101.02	10781	3,6	40	245	G1/4“	0,04	15
R&H 100.102.02	10782	4,1	97	253		0,07	60
R&H 100.103.02	10783	4,4	120	240		0,15	
R&H 100.105.02	10784	4,9	144		G3/8“	0,30	

Brake Type R&H 100.10X.01

pneumatically applied

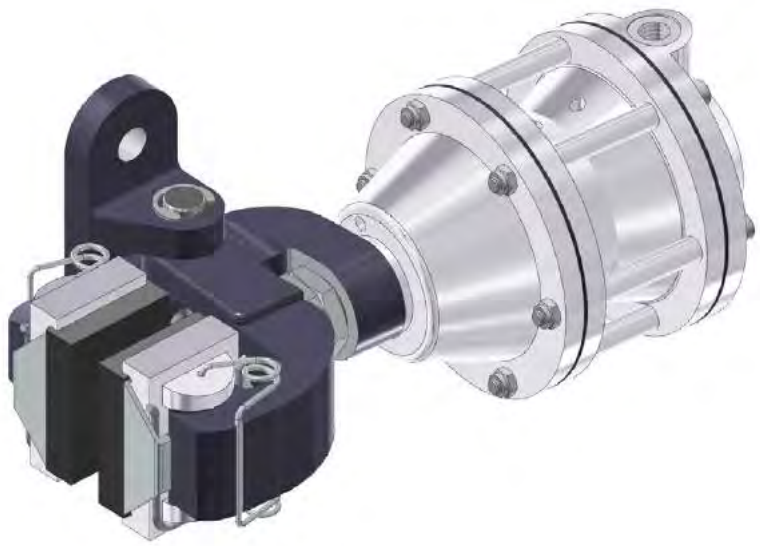

R&H 100.104.01

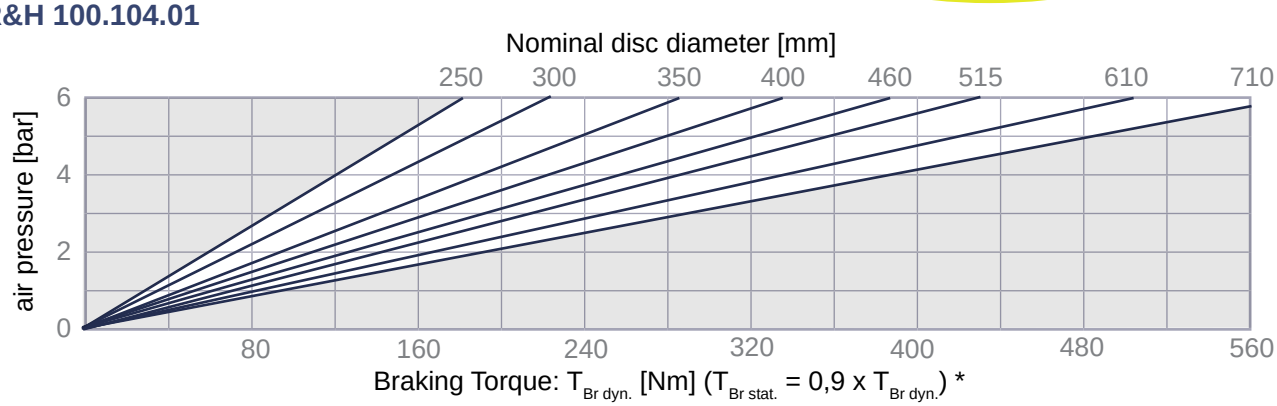

R&H 100.106.01

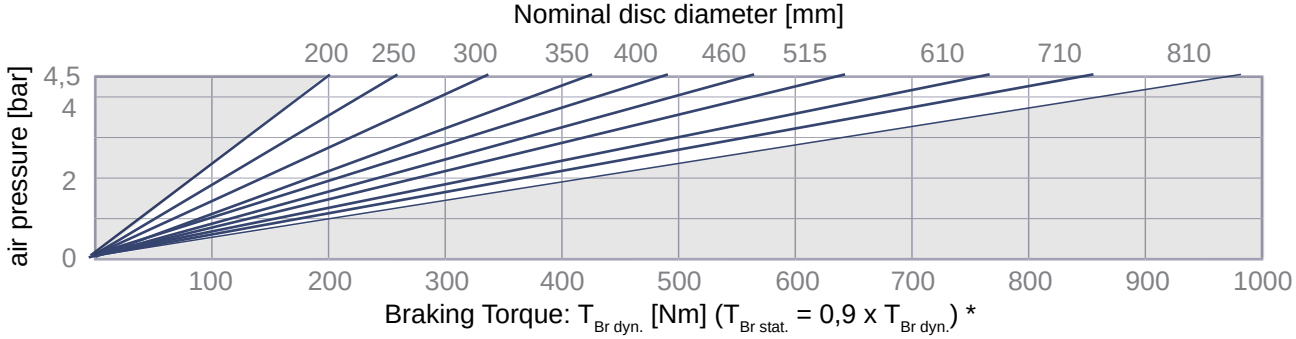

* using one chamber $T_{Br\ dyn.}$ x 0,5

Brake Type R&H 100.10X.01

pneumatically applied

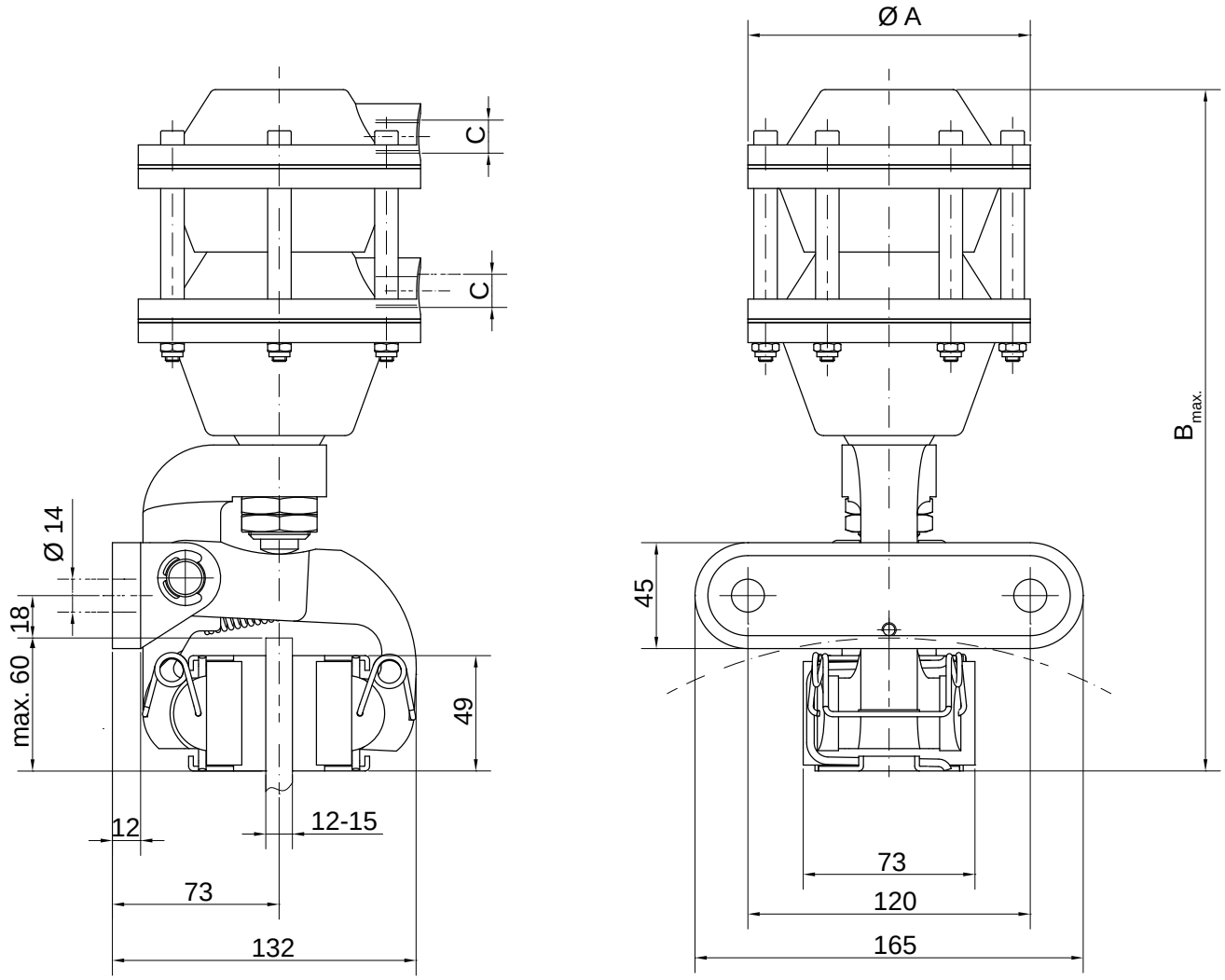

Mounting position is horizontal. Please get in touch if different.

Type	*Part-No.*	Ø A [mm]	B [mm]	C	V / stroke [dm³]	Mass [kg]
R&H 100.104.01	***10560***	120	290	2 x G1/4“	2 x 0,15	4,6
R&H 100.106.01	***10387***	144		2 x G3/8“	2 x 0,30	5,4

Brake Type R&H 100.10X.02

pneumatically applied

R&H 100.104.02

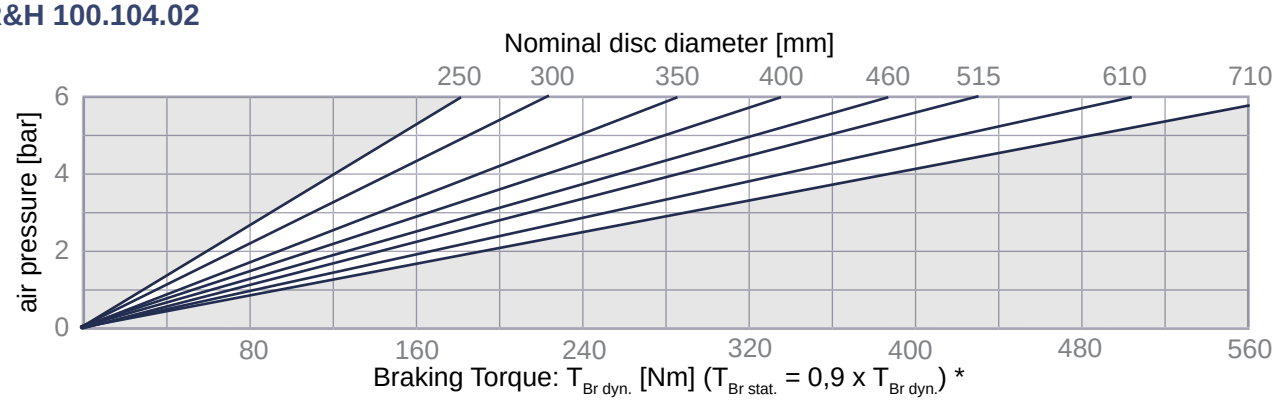

R&H 100.106.02

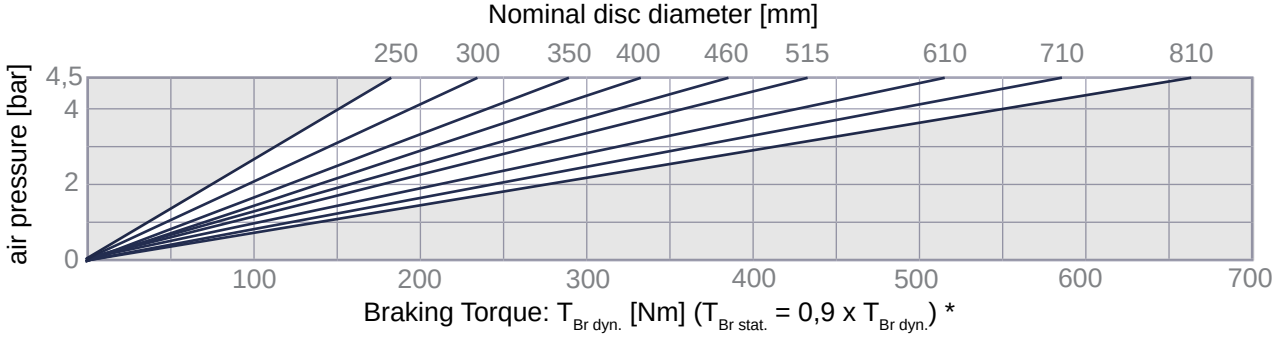

* using one chamber $T_{Br\ dyn.}$ x 0,5

Brake Type R&H 100.10X.02

pneumatically applied

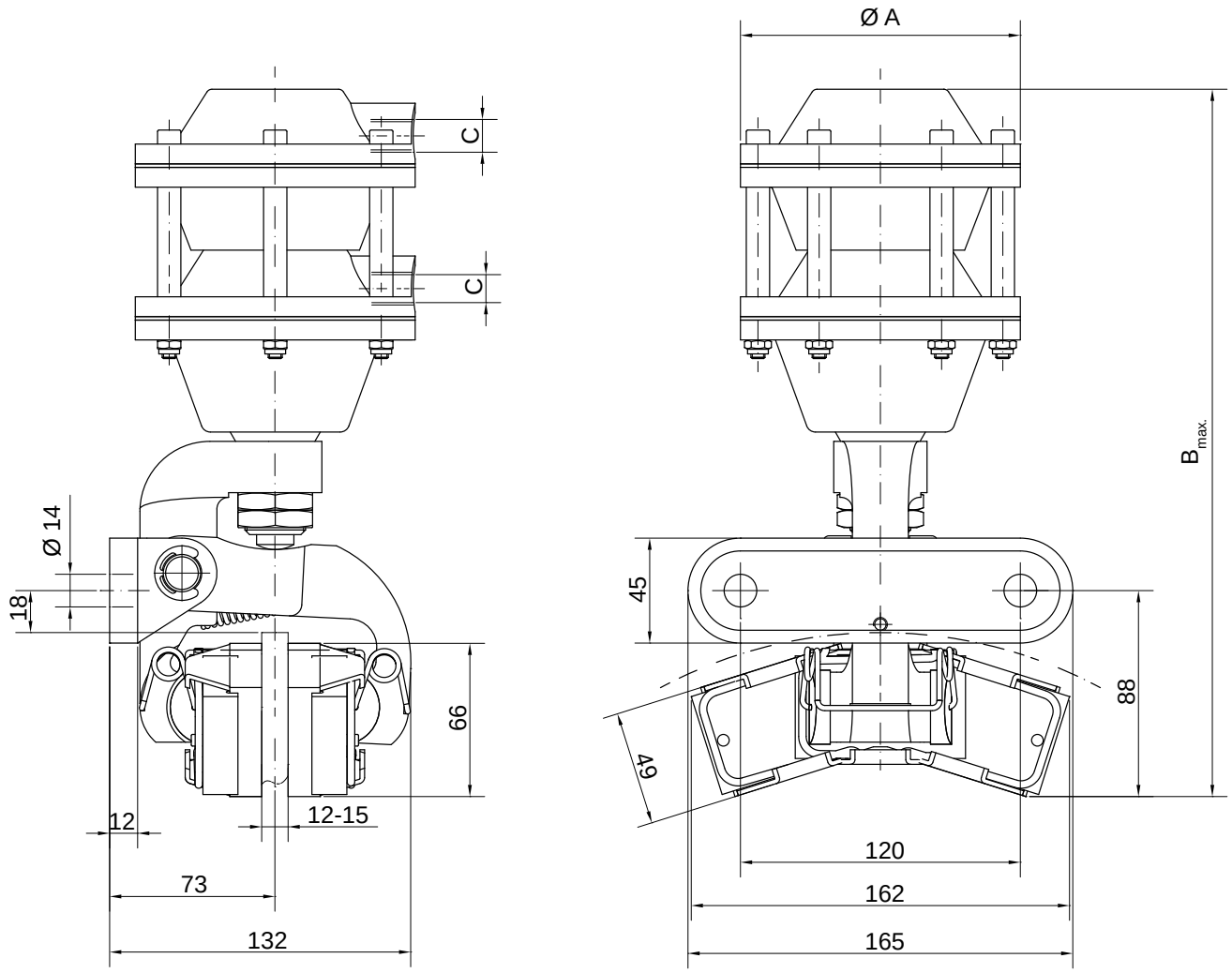

Mounting position is horizontal. Please get in touch if different.

Type	Part-No.	Ø A [mm]	B [mm]	C	V / stroke [dm³]	Mass [kg]
R&H 100.104.02	**10917**	120	304	2 x G1/4“	2 x 0,15	4,6
R&H 100.106.02	**10916**	144		2 x G3/8“	2 x 0,30	5,4

Brake Type R&H 125.10X.01

pneumatically applied

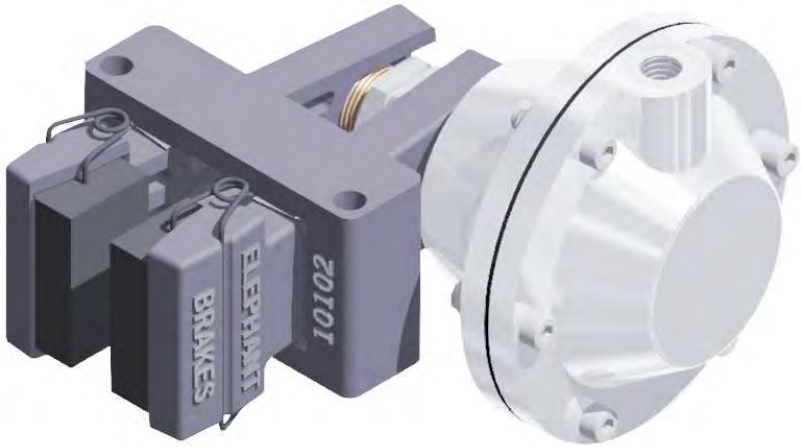

R&H 125.101.01

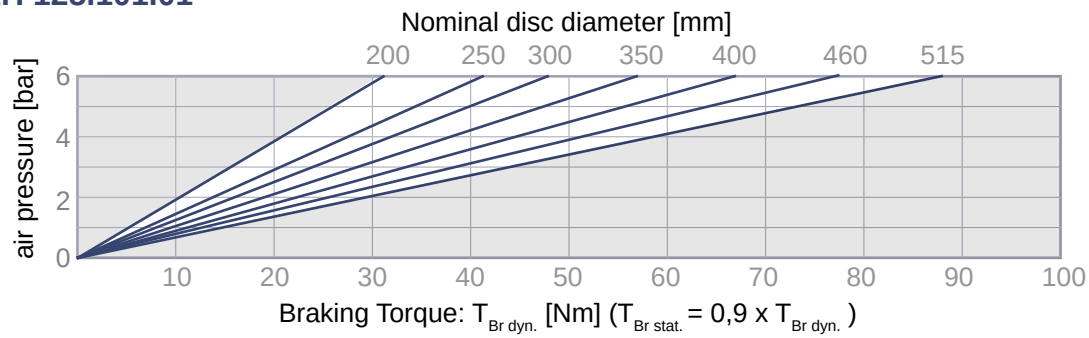

R&H 125.102.01

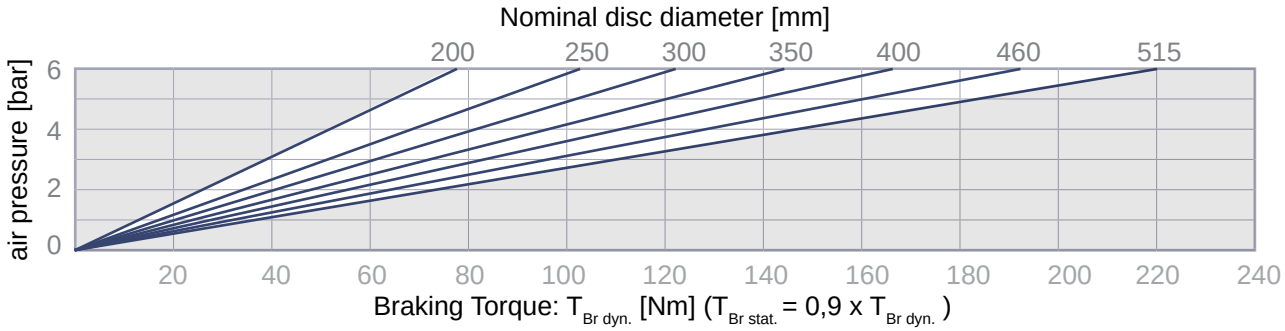

R&H 125.103.01

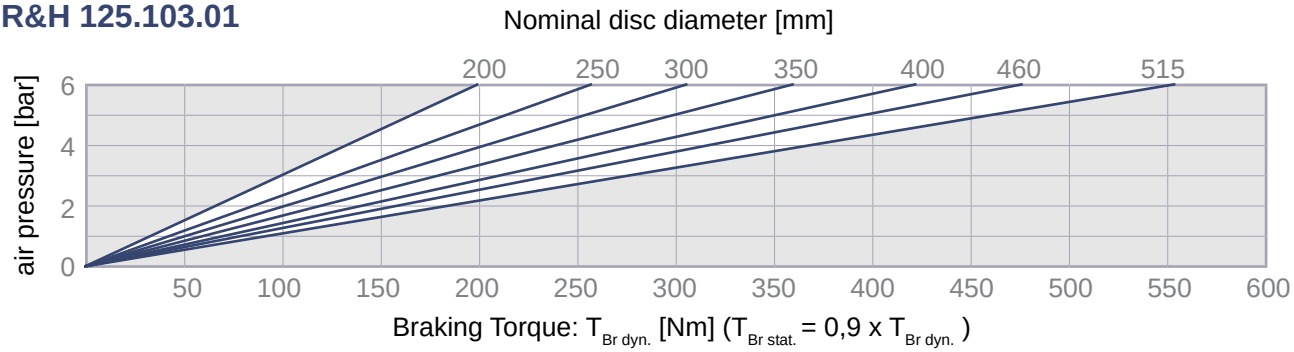

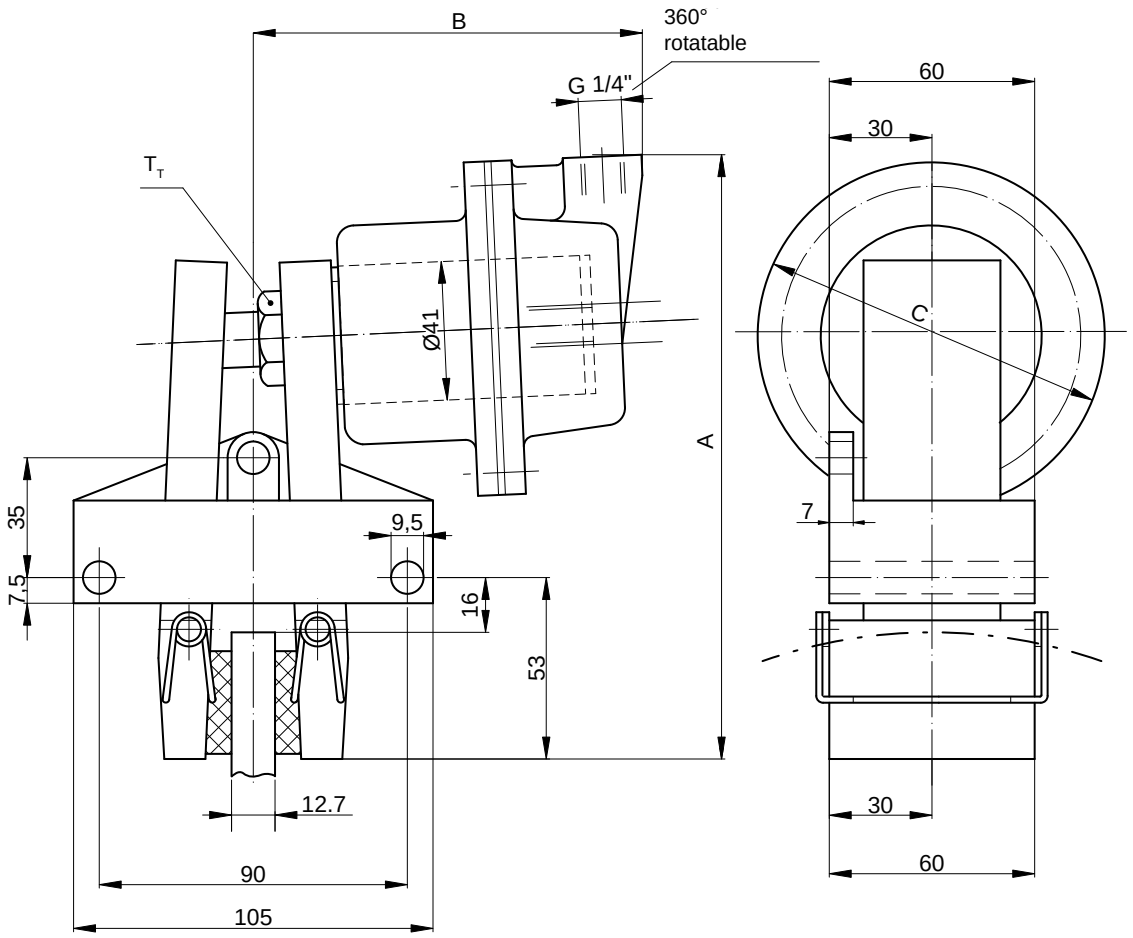

Mounting position is horizontal. Please get in touch if different.

A right hand mounted thruster is standard – left hand mounted please state with order.

Type	*Part-No.*	Mass [kg]	A [mm]	B [mm]	C	V / stroke [dm³]	T_T [Nm]
R&H 125.101.01	***10104***	1	150	100	41	0,04	15
R&H 125.102.01	***10105***	1,5	170	120	97	0,07	60
R&H 125.103.01	***10103***	1,8	183	110	120	0,15	

Brake Type R&H 200.10X.01

pneumatically applied

R&H 200.102.01

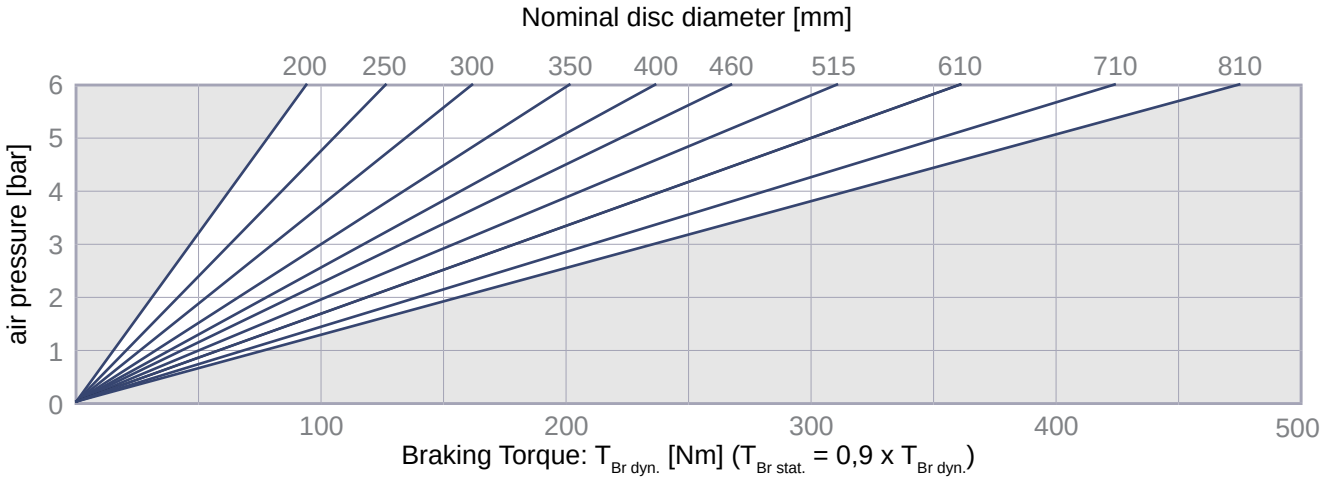

R&H 200.103.01

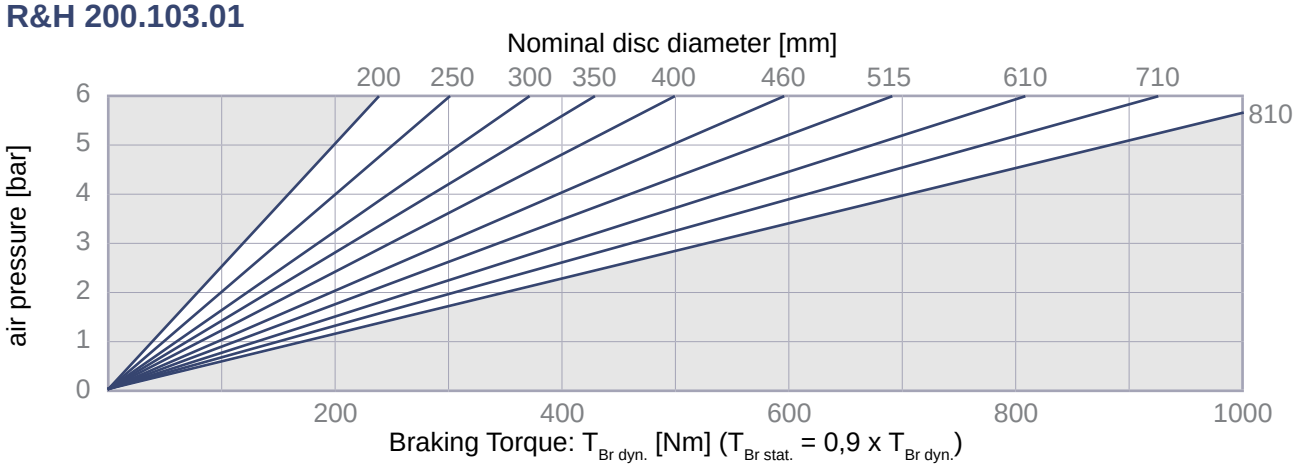

R&H 200.105.01

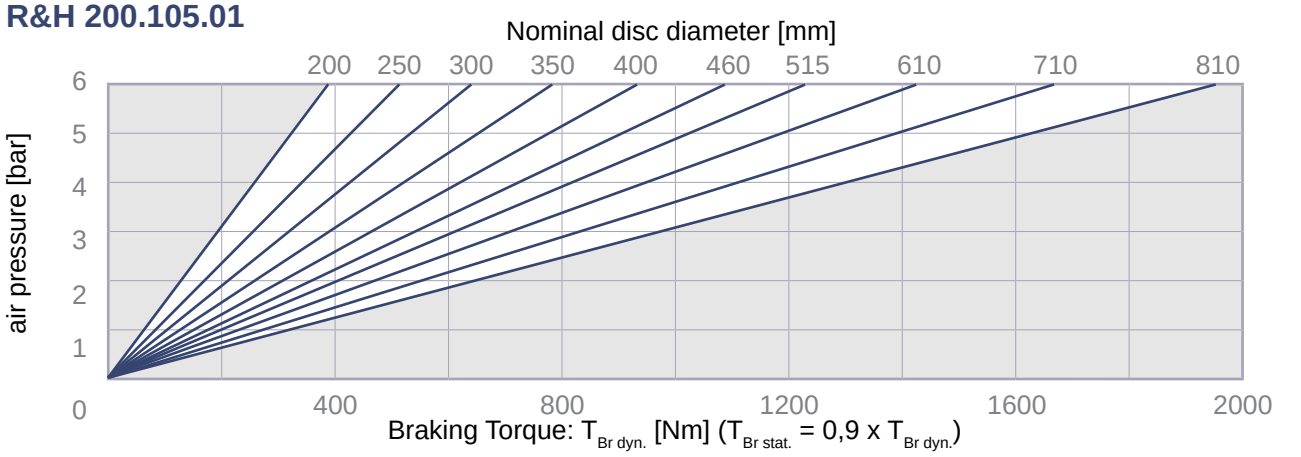

R&H 200.107.01

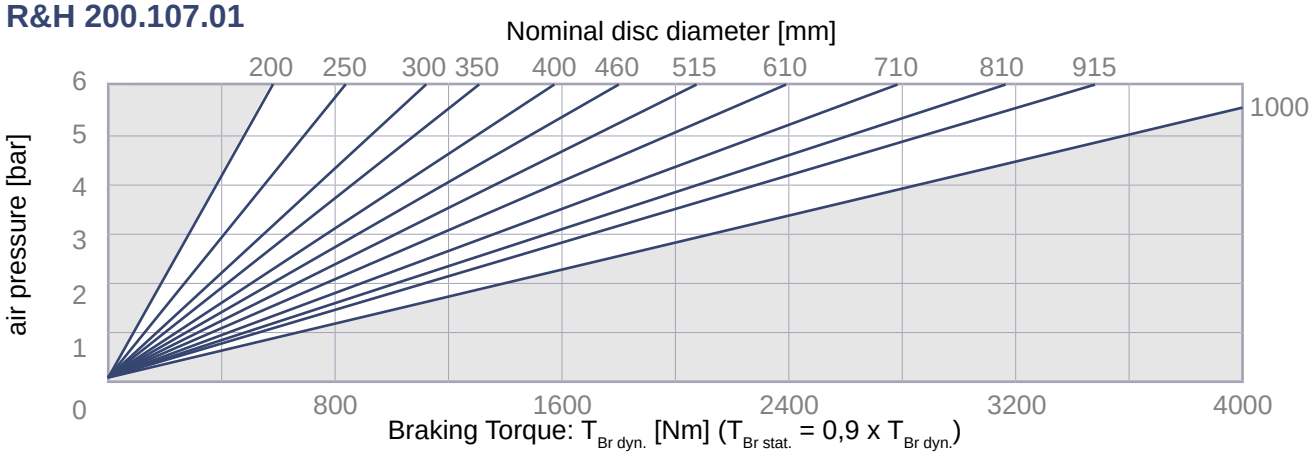

Brake Type R&H 200.10X.01

pneumatically applied

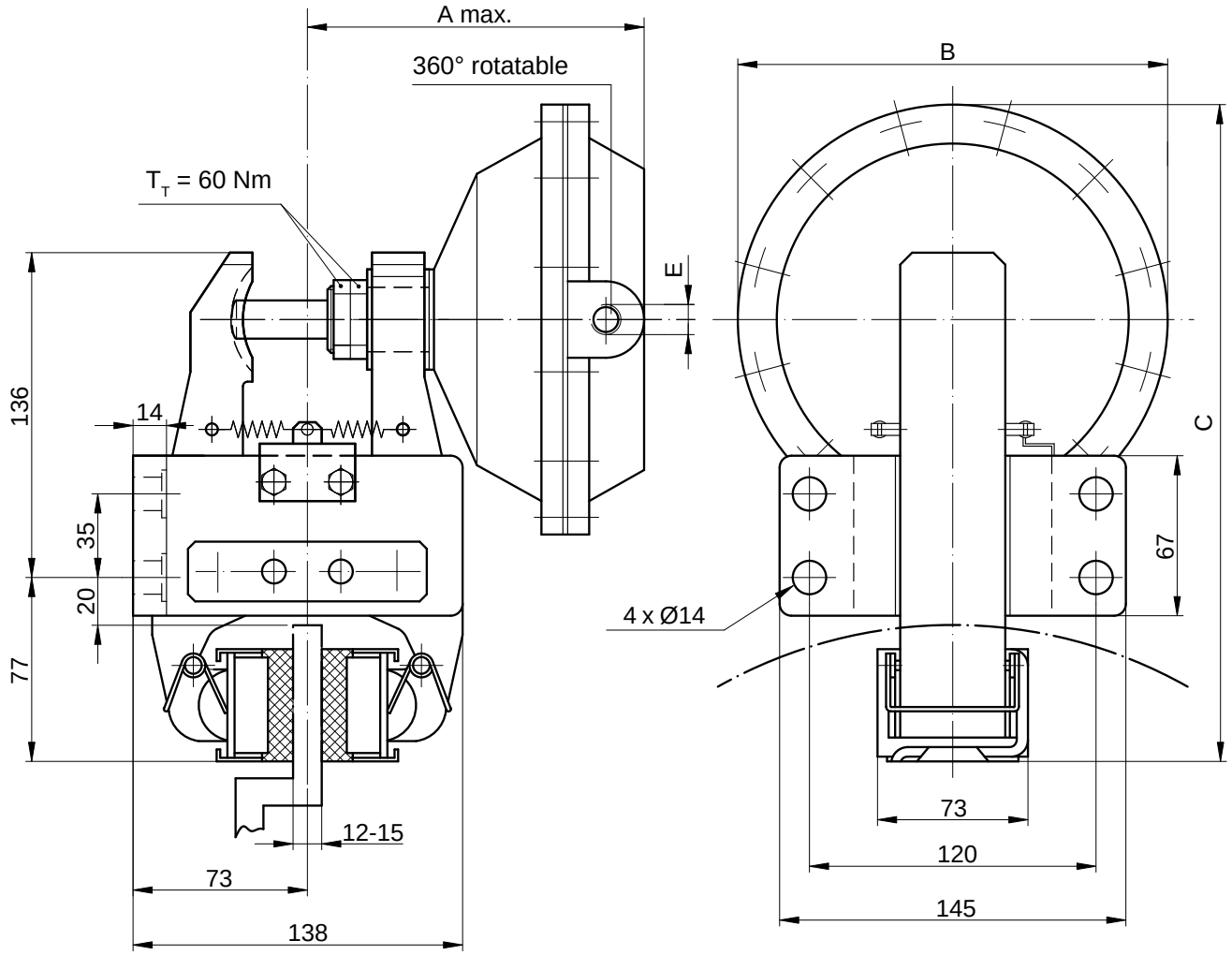

Mounting position is horizontal. Please get in touch if different.

A right hand mounted actuator is standard – „flange side“ mounted please state with order.

Type	*Part-No.*	A [mm]	Ø B [mm]	C [mm]	E	V / stroke [dm³]	Mass [kg]
R&H 200.102.01	***11145***	155	97	236	G 1/4“	0,07	8,2
R&H 200.103.01	***11148***	151	120	248		0,15	8,6
R&H 200.105.01	***11151***		144	260	G 3/8“	0,30	8,8
R&H 200.107.01	***11154***	165	180	278		0,43	9,6

ELEPHANT BRAKES BY RIETSCHOTEN

Brake Type R&H 200.420.01

pneumatically applied

Part-No.: 12792

NOTE:
Also spring-applied, pneumatically released usable

pneumatically applied

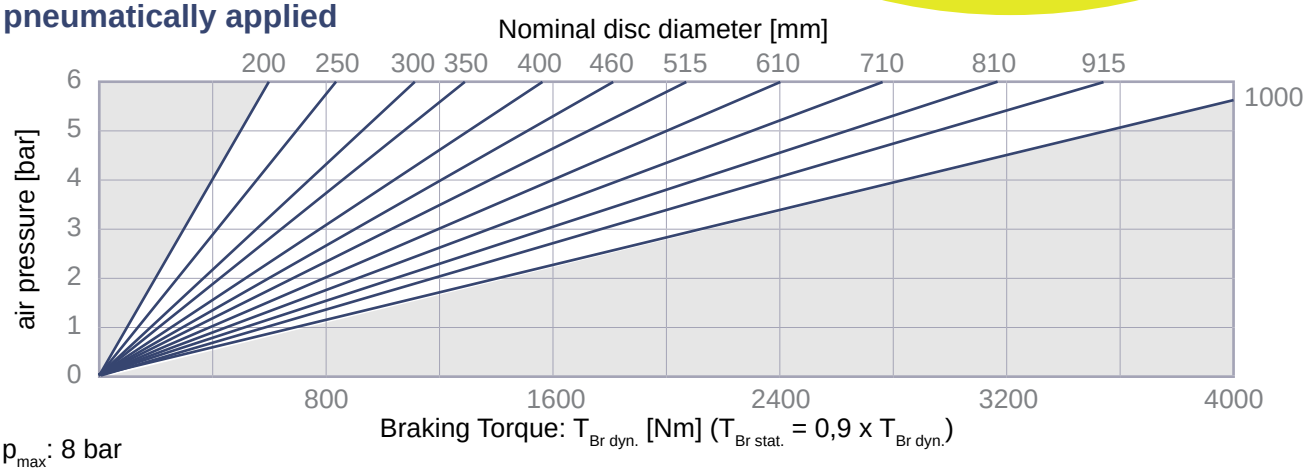

p_{max}: 8 bar

spring-applied, pneumatically released

Nominal disc diameter [mm]										
200	250	300	350	400	460	515	610	710	810	915
Braking Torque: $T_{Br\ dyn.}$ [Nm] ($T_{Br\ stat.}$ = 0,9 x $T_{Br\ dyn.}$)										
550	775	925	1050	1250	1400	1650	2000	2300	2600	3000

p_{min}: 5 bar
p_{max}: 10 bar
V / stroke: 0,22 dm³
Mass: 16,5 kg

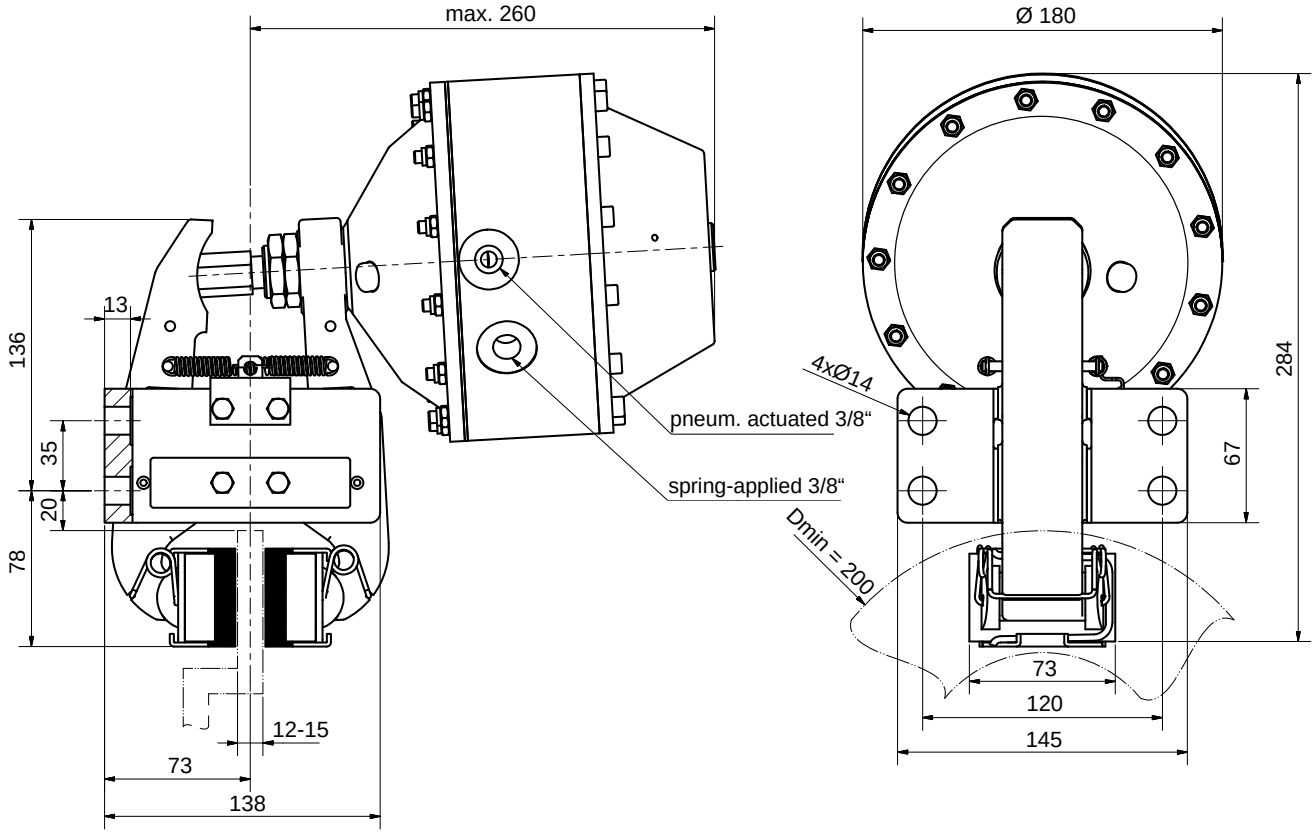

Mounting position is horizontal. Please get in touch if different.

A right hand mounted actuator is standard – „flange side“ mounted please state with order.

Brake Type R&H 200.10X.01

pneumatically applied

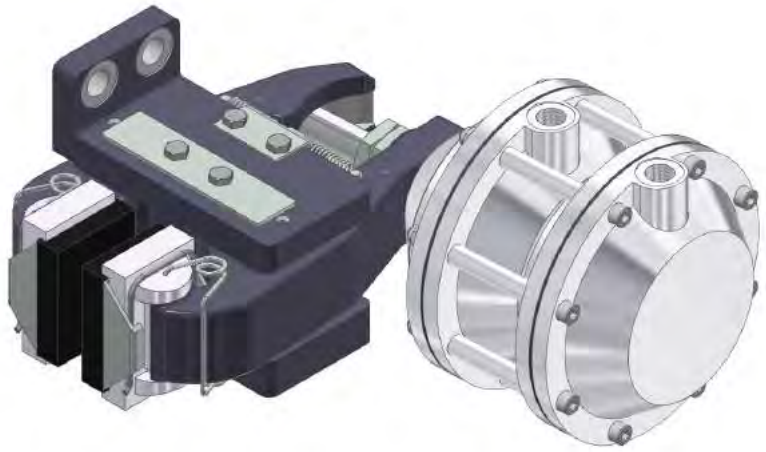

R&H 200.104.01

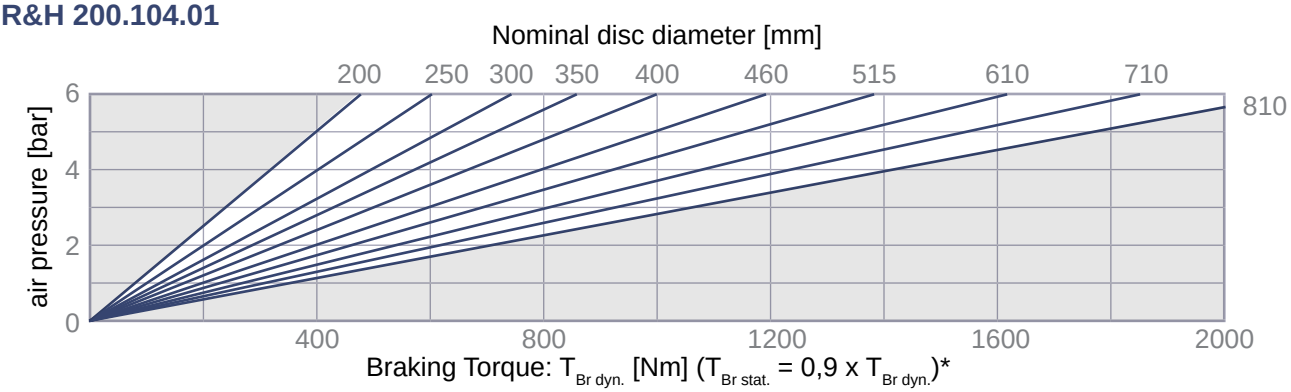

R&H 200.106.01

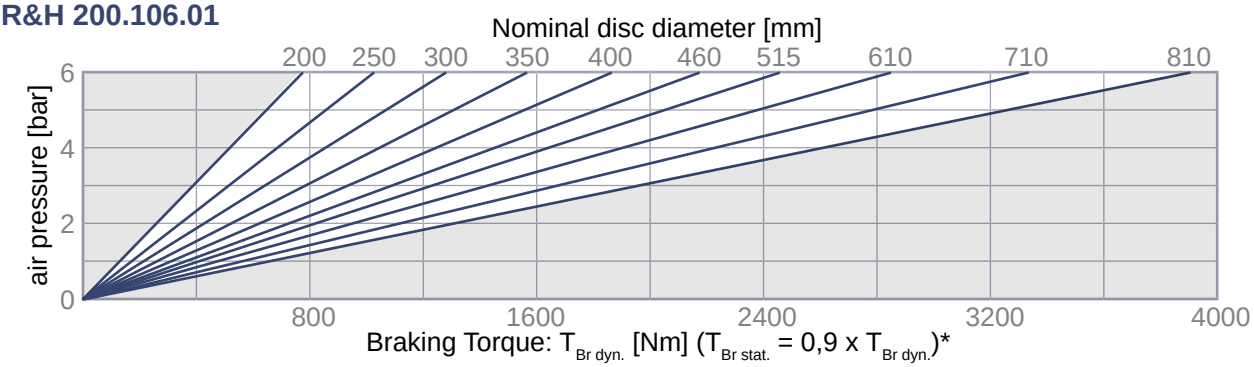

* Using one chamber $T_{Br\ dyn.}$ x 0,5

R&H 200.108.01

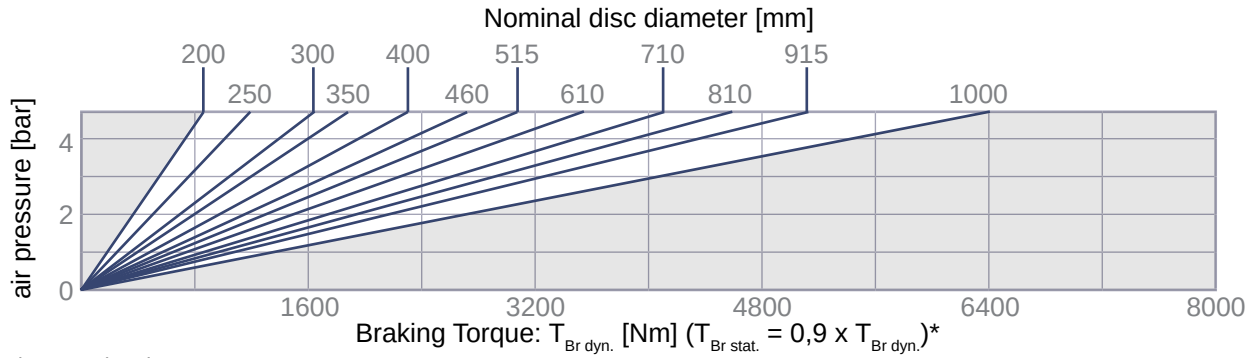

* Using one chamber $T_{Br\ dyn.}$ x 0,5

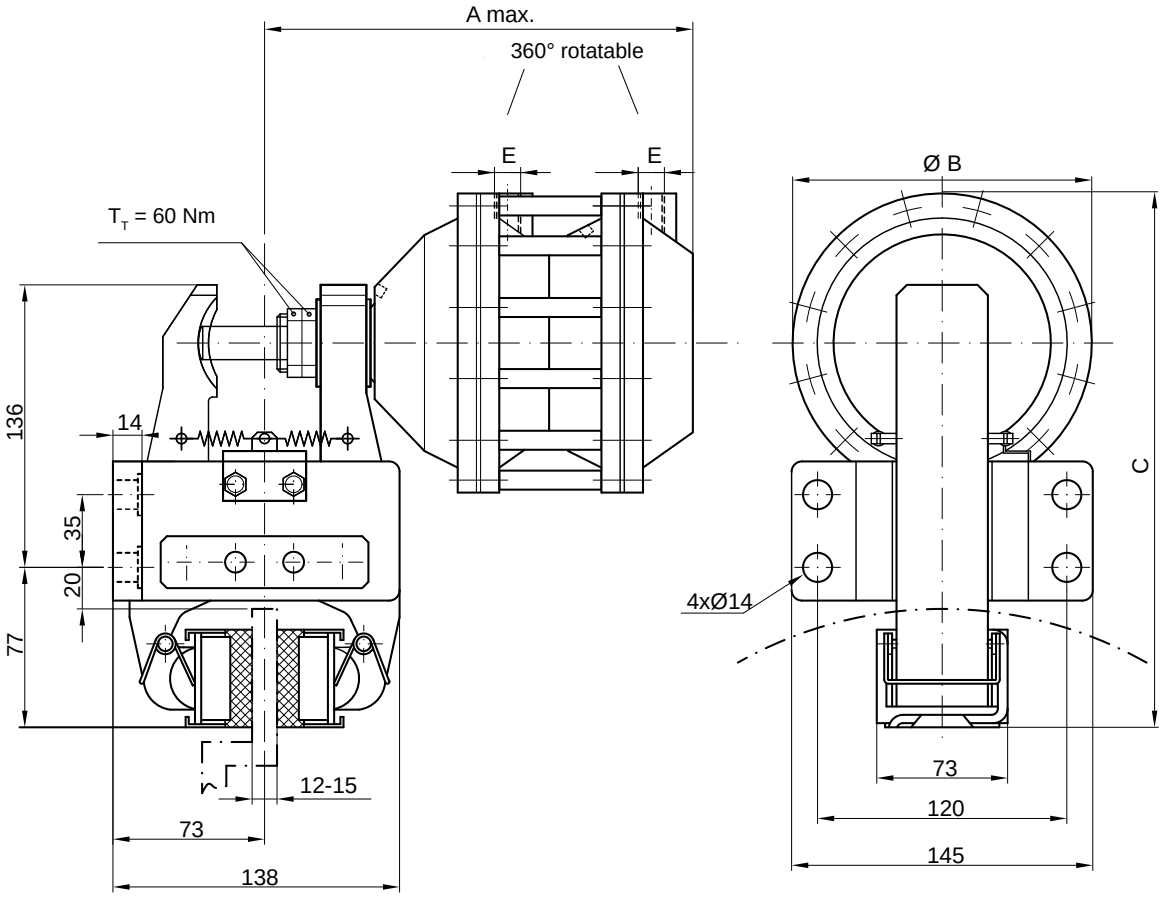

Mounting position is horizontal. Please get in touch if different.

A right hand mounted actuator is standard – „flange side“ mounted please state with order.

Type	*Part-No.*	A [mm]	ØB [mm]	C [mm]	E	V / stroke [dm³]	Mass [kg]
R&H 200.104.01	***11155***	212	120	248	G 1/4“	2 x 0,15	9,2
R&H 200.106.01	***11156***	214	144	260	G 3/8“	2 x 0,30	9,9
R&H 200.108.01	***12586***	218	180	278		2 x 0,43	10,7

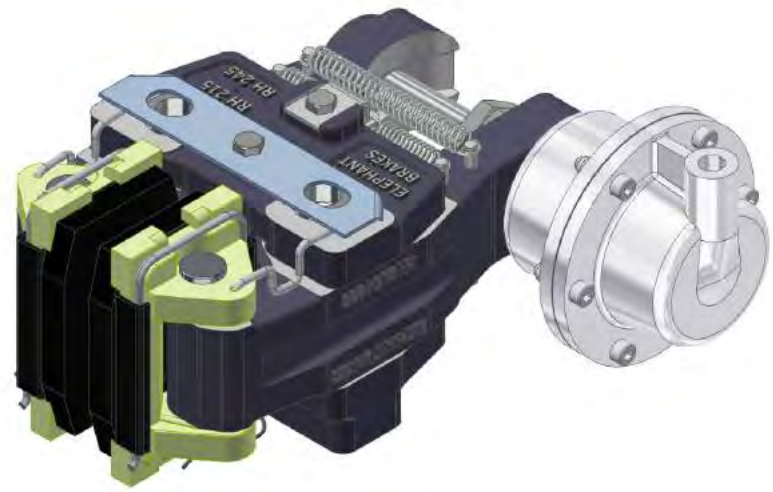

R&H 215.102.01 / R&H 225.102.01 / R&H 230.102.01

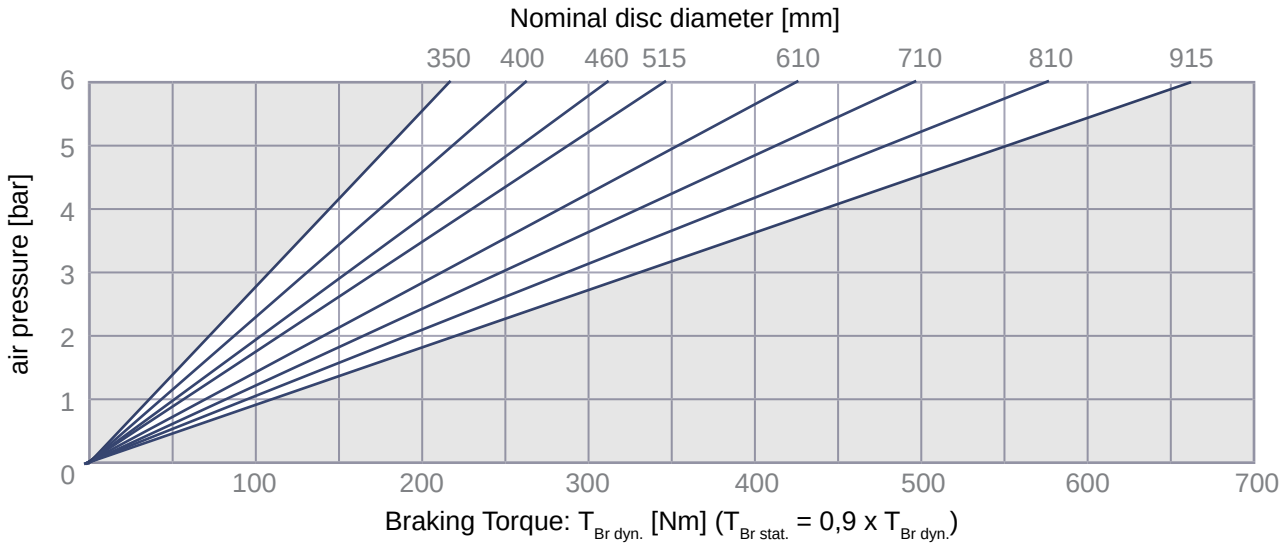

R&H 215.103.01 / R&H 225.103.01 / R&H 230.103.01

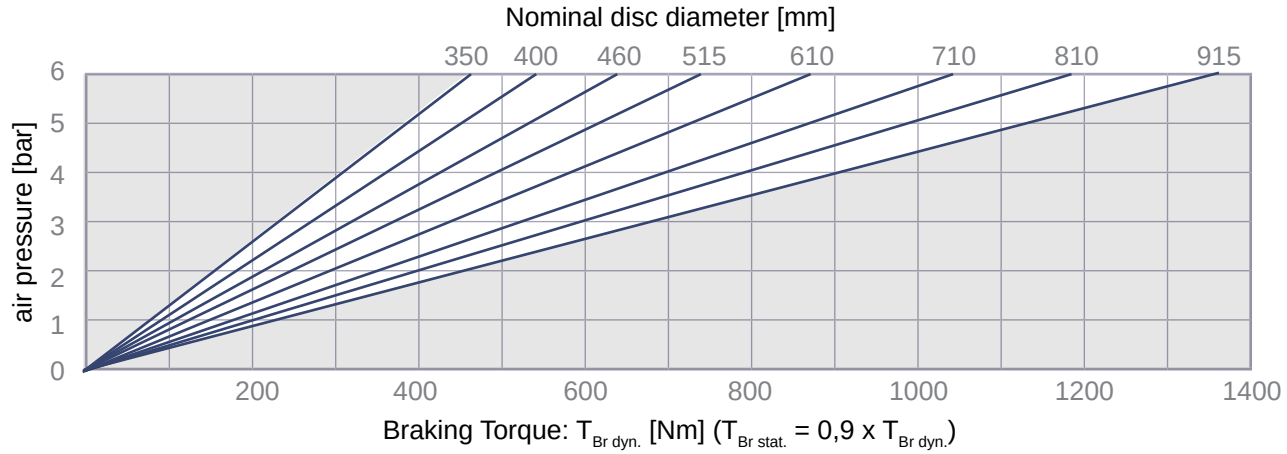

R&H 215.105.01 / R&H 225.105.01 / R&H 230.105.01 / R&H 245.105.01

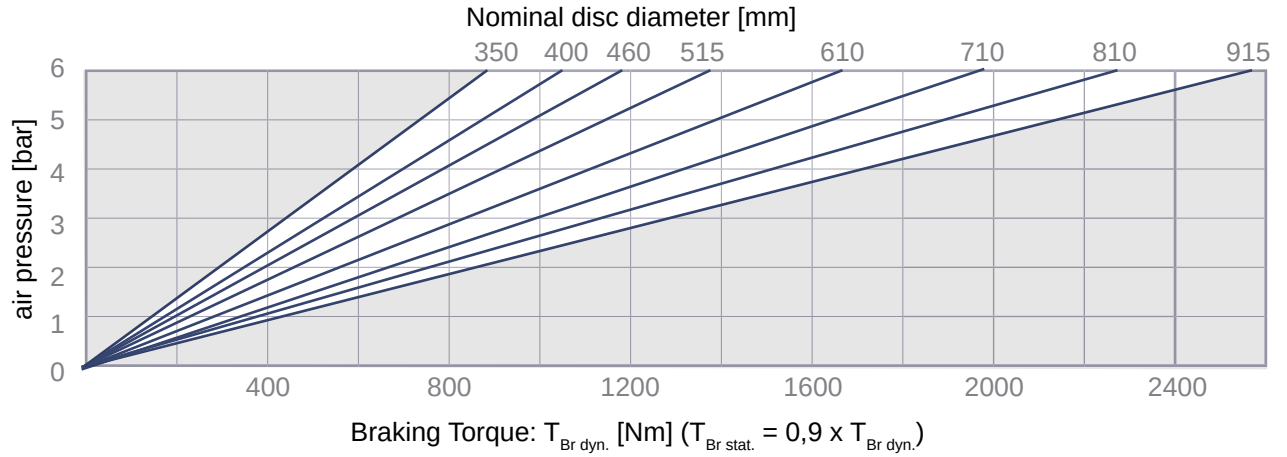

R&H 215.107.01 / R&H 225.107.01 / R&H 230.107.01 / R&H 245.107.01

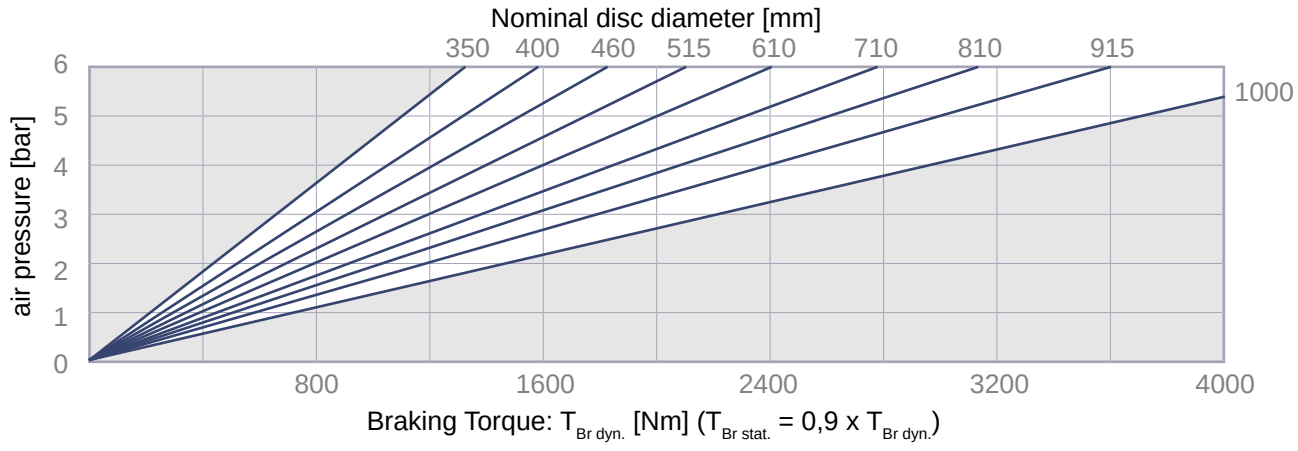

Brake Type R&H 2XX.10X.01

pneumatically applied

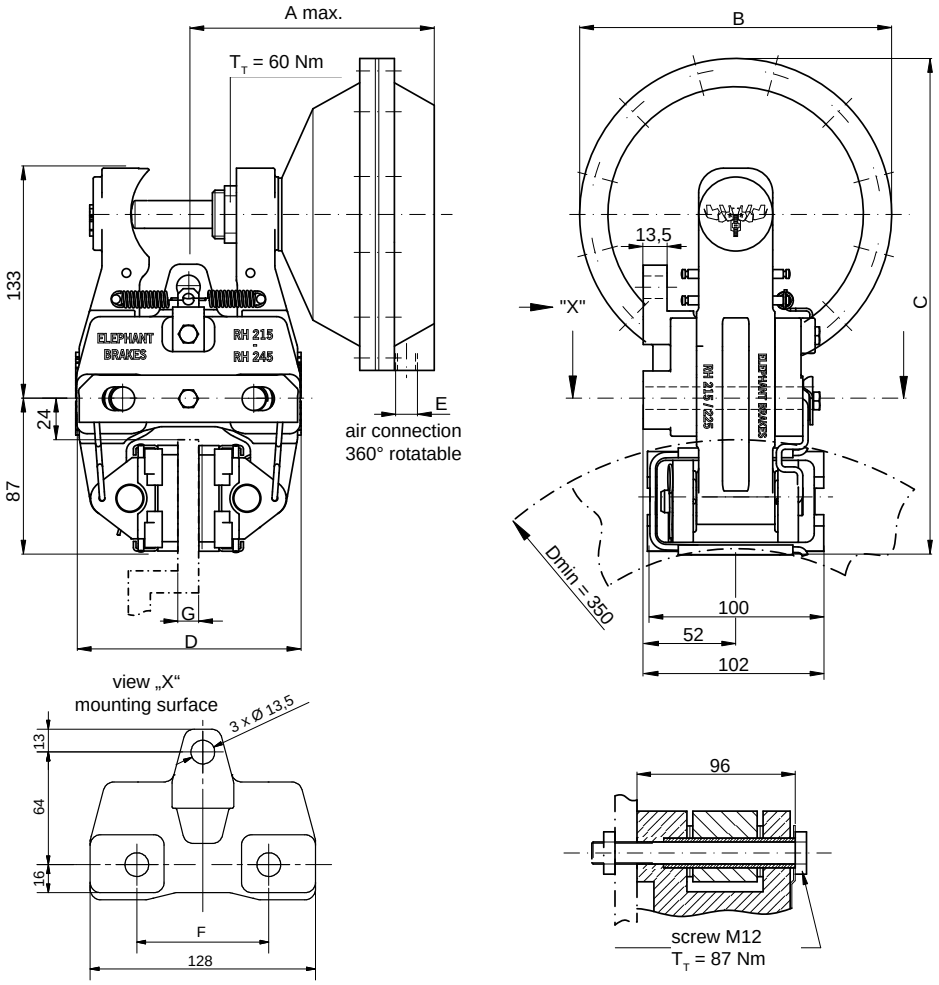

Mounting position is horizontal. Please get in touch if different.

A right hand mounted thruster is standard – left hand mounted please state with order.

Type	Part-No.	A [mm]	Ø B [mm]	C [mm]	D [mm]	E	F [mm]	G [mm]	V/stroke [dm³]	Mass [kg]
R&H 215.102.01	10684	154	97	241	130	G 1/4“	75	12-15	0,07	8,6
R&H 225.102.01	11086	156			140		84	25,4		
R&H 230.102.01	10704	157			144		75	30		8,8
R&H 215.103.01	10685	156	120	252	130		75	12-15	0,15	8,7
R&H 225.103.01	11087	157			140		84	25,4		
R&H 230.103.01	10705				144		75	30		8,9
R&H 215.105.01	10687	159	144	264	130	G 3/8“	75	12-15	0,30	9,1
R&H 225.105.01	11088				140		84	25,4		
R&H 230.105.01	10707				144		75	30		9,3
R&H 245.105.01	14349	156			154		84	45		
R&H 215.107.01	10689	164	180	282	130		75	12-15	0,43	9,9
R&H 225.107.01	11089				140		84	25,4		
R&H 230.107.01	10709				144		75	30		10,1
R&H 245.107.01	13428	161			154		84	45		

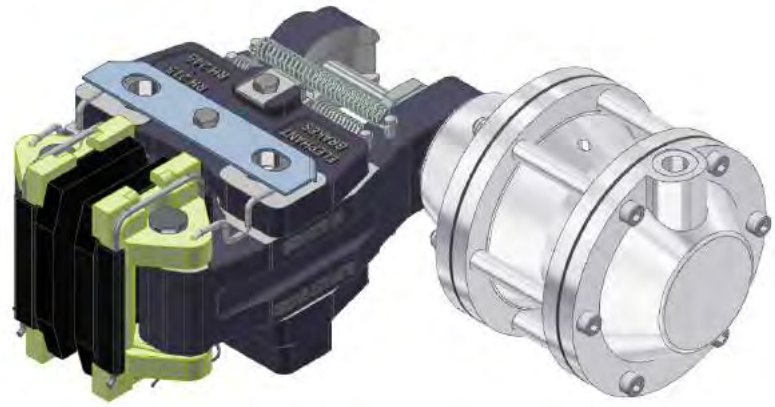

R&H 215.104.01 / R&H 230.104.01

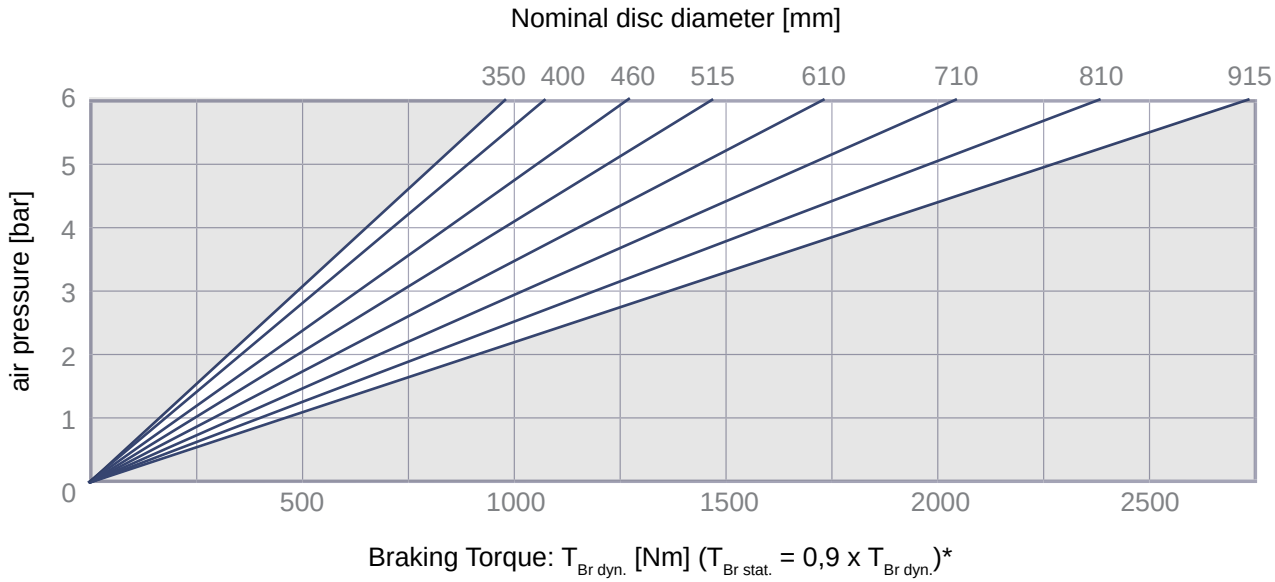

R&H 215.106.01 / R&H 230.106.01

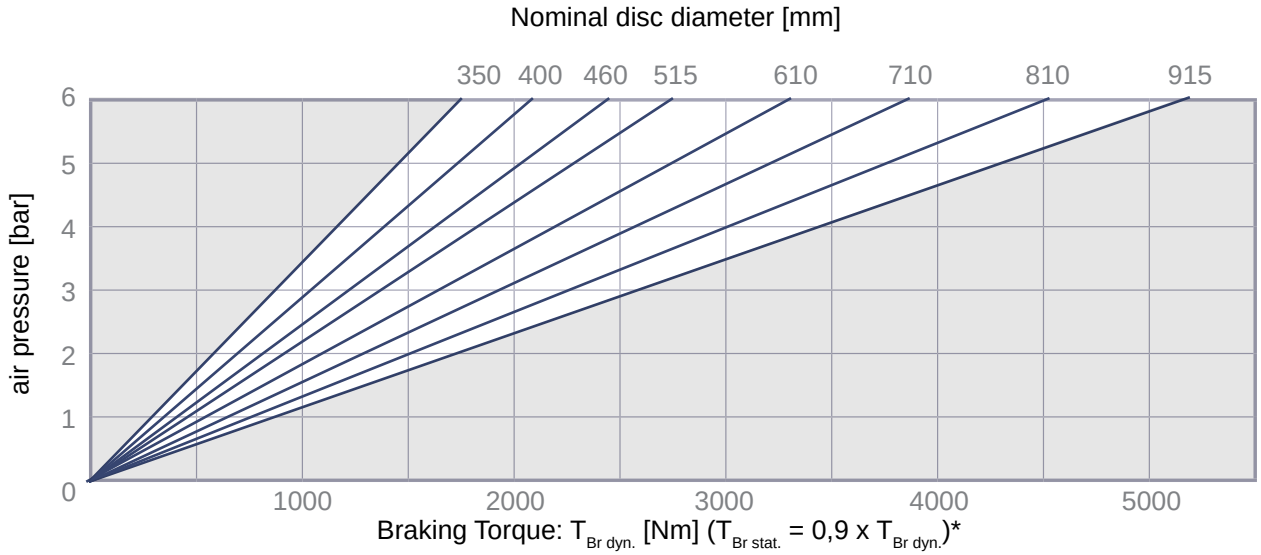

R&H 215.108.01 / R&H 230.108.01

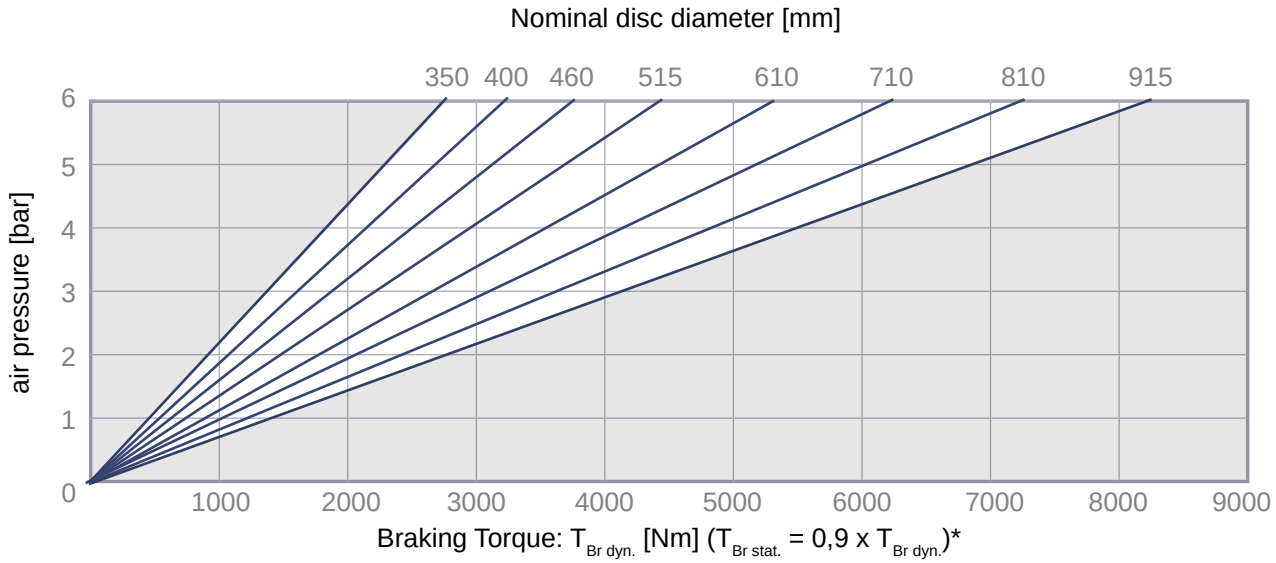

* using one chamber $T_{Br\ dyn.}$ x 0,5

Brake Type R&H 2XX.10X.01

pneumatically applied

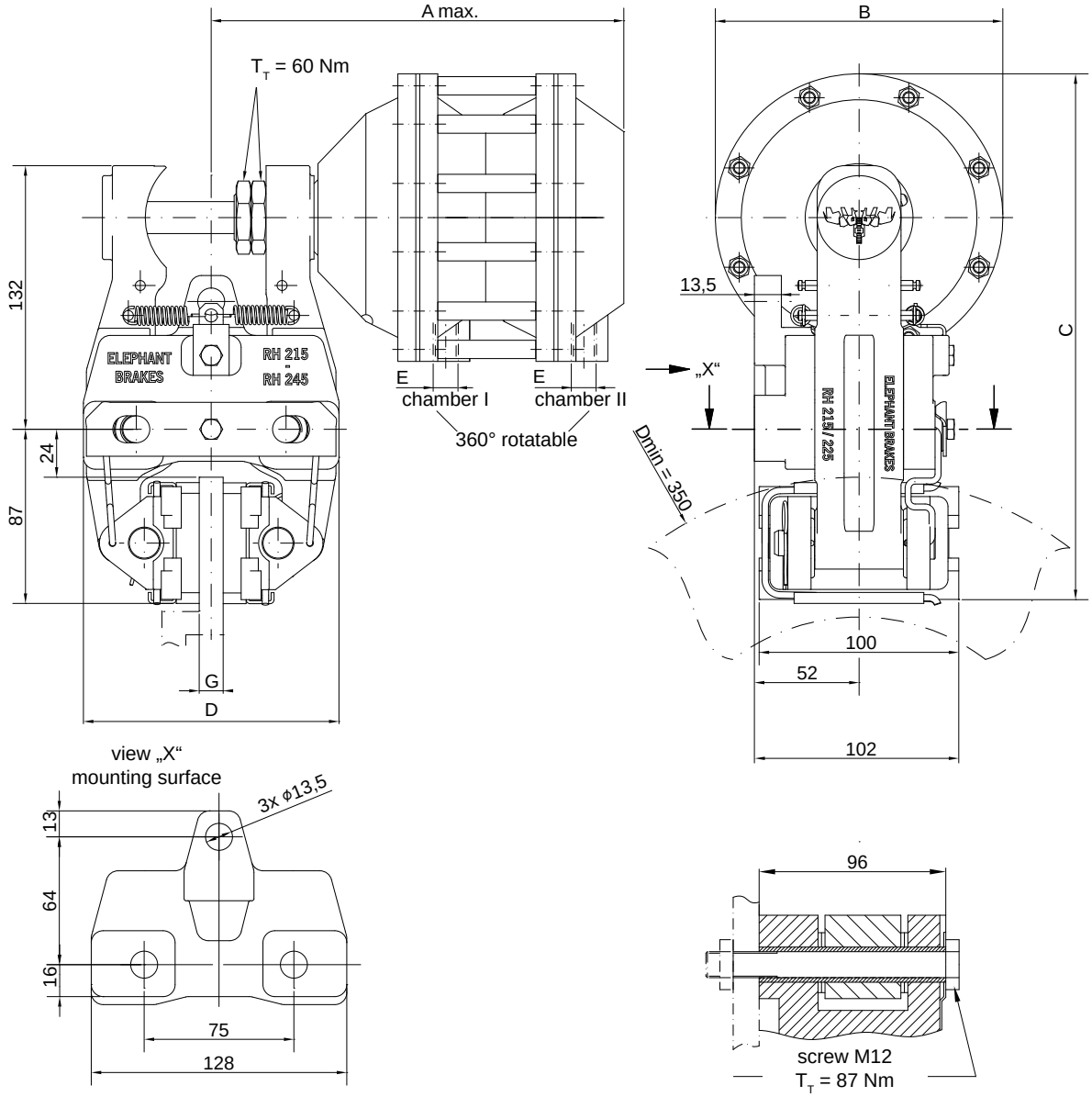

Mounting position is horizontal. Please get in touch if different.

A right hand mounted thruster is standard – left hand mounted please state with order.

Type	Part-No.	A	Ø B [mm]	C [mm]	D [mm]	E	G [mm]	max. V/stroke [dm³]	Mass [kg]
R&H 215.104.01	10686	215	120	253	130	2 x G 1/4“	12-15	2 x 0,15	9,7
R&H 230.104.01	10706	217			140		30		9,9
R&H 215.106.01	10688	217	144	265	130	2 x G 3/8“	12-15	2 x 0,30	10,4
R&H 230.106.01	10708	218			140		30		10,6
R&H 215.108.01	10690	221	180	283	130		12-15	2 x 0,43	11,9
R&H 230.108.01	10710	222			140		30		12,1

Brake Type R&H 250.10X.01

pneumatically applied

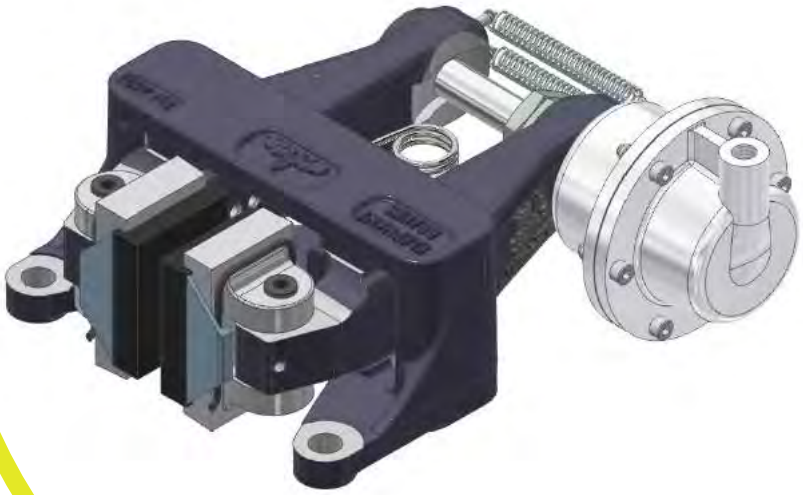

R&H 250.102.01

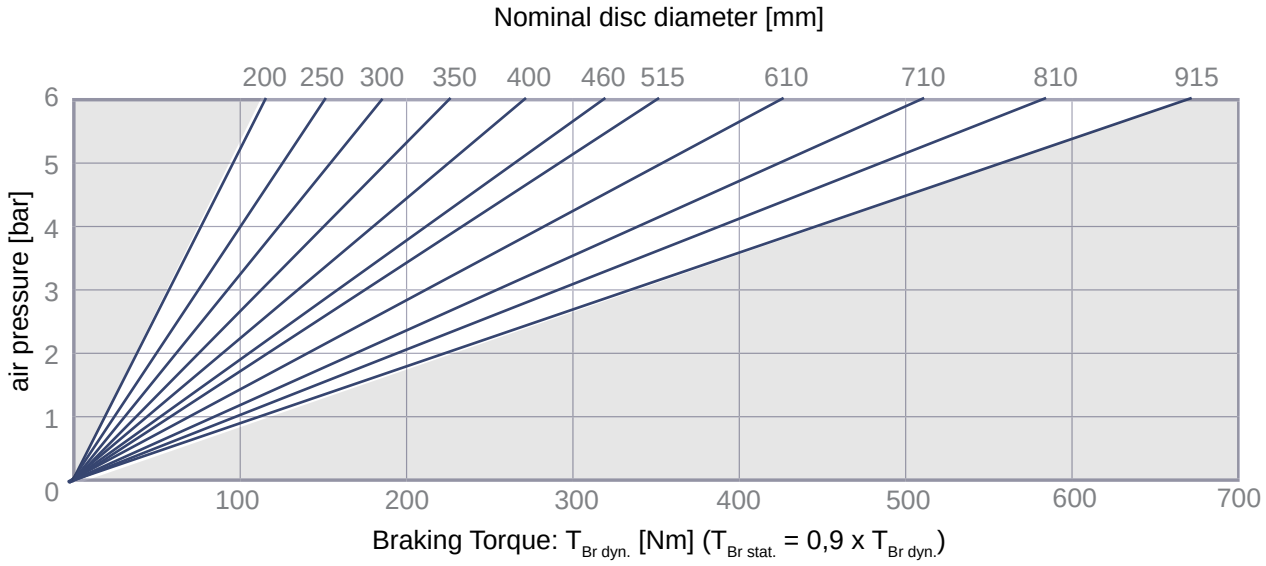

R&H 250.103.01

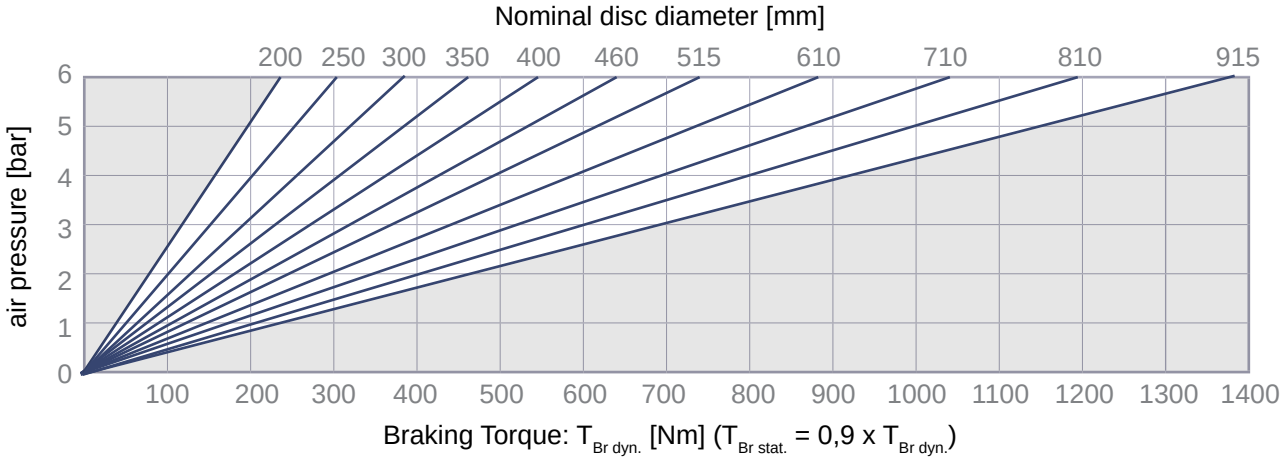

R&H 250.105.01

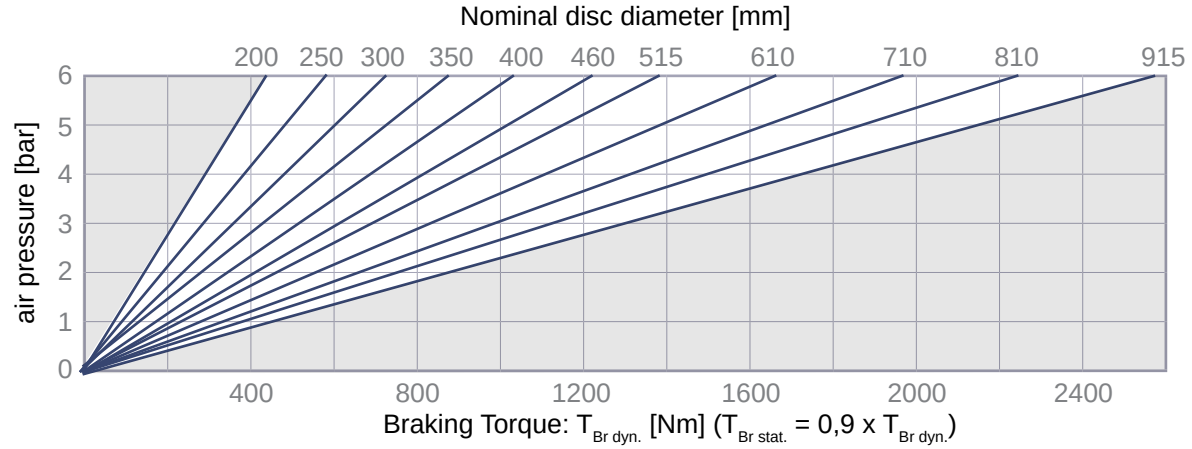

R&H 250.107.01

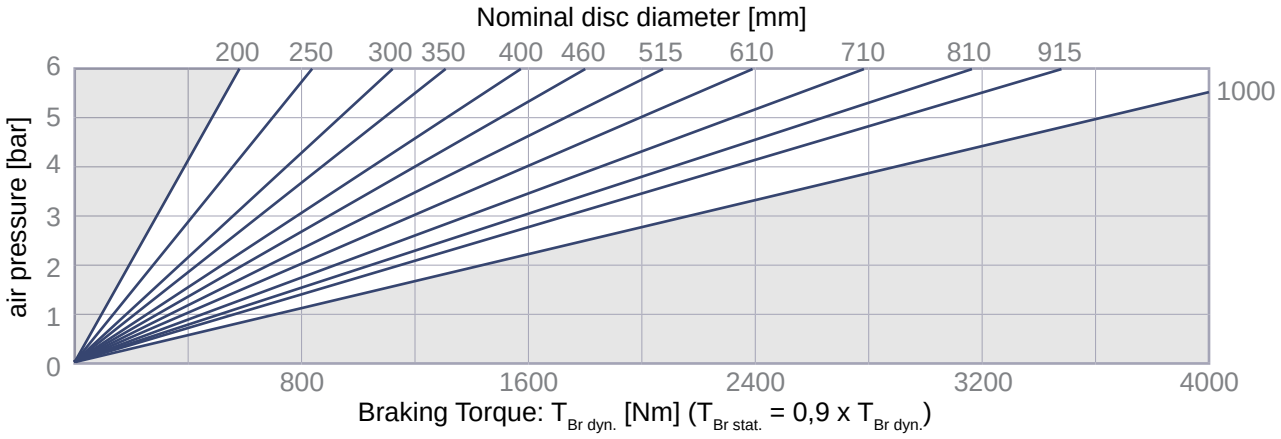

Brake Type R&H 250.10X.01

pneumatically applied

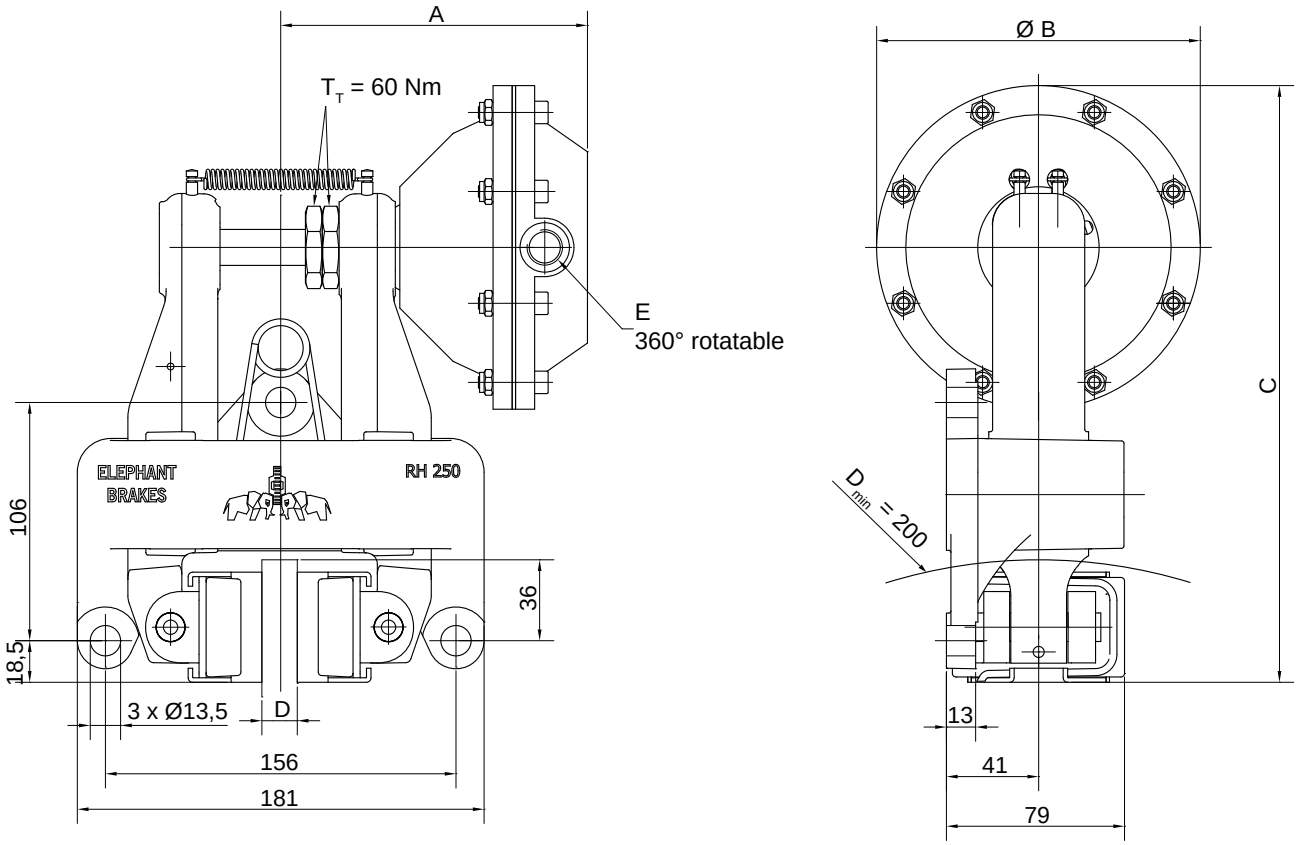

Mounting position is horizontal. Please get in touch if different.

A right hand mounted thruster is standard – left hand mounted please state with order.

Type	Part-No.	A [mm]	B [mm]	C [mm]	D [mm]	E	V / stroke [cm³]	Mass [kg]
R&H 250.102.01	10059	160	97	242	12,7	G 1/4“	0,07	7,4
R&H 250.102.01 short.	10060	157			25,4			
R&H 250.103.01	10050	150	120	254	12,7		0,15	7,5
R&H 250.103.01 short.	10051	147			25,4			
R&H 250.105.01	10038	150	144	266	12,7	G 3/8“	0,30	7,9
R&H 250.105.01 short.	10039	147			25,4			
R&H 250.107.01	10046	160	180	284	12,7		0,43	8,7
R&H 250.107.01 short.	10047	157			25,4			

Brake Type R&H 250.10X.02

pneumatically applied

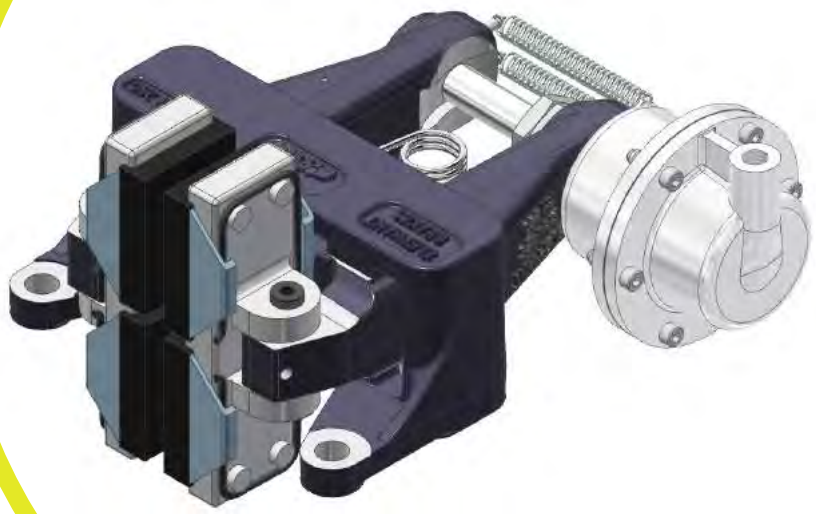

R&H 250.102.02

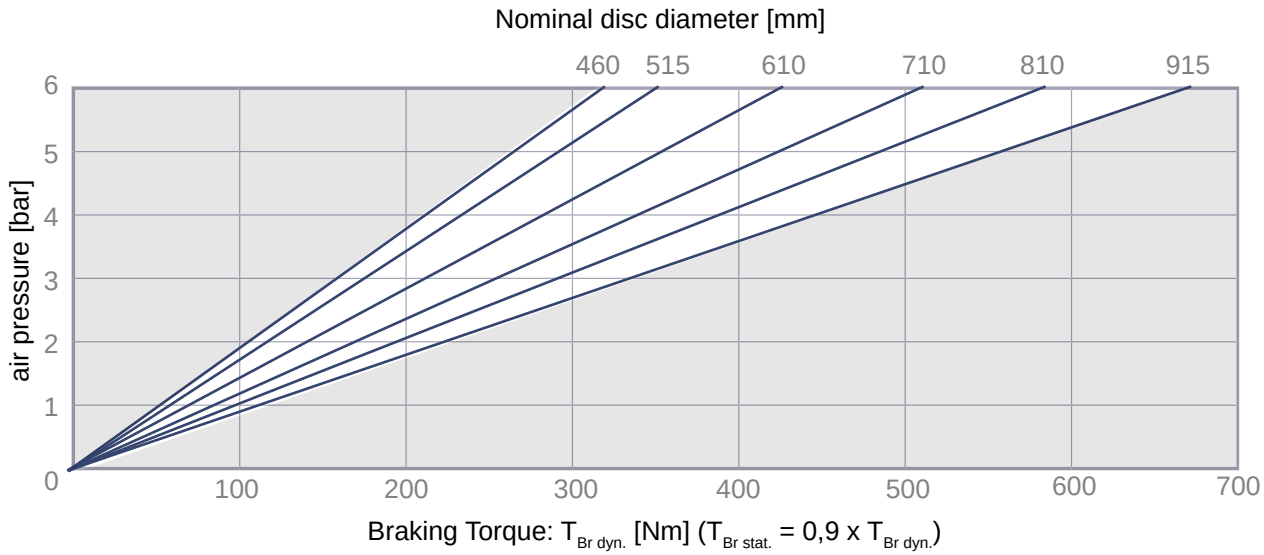

R&H 250.103.02

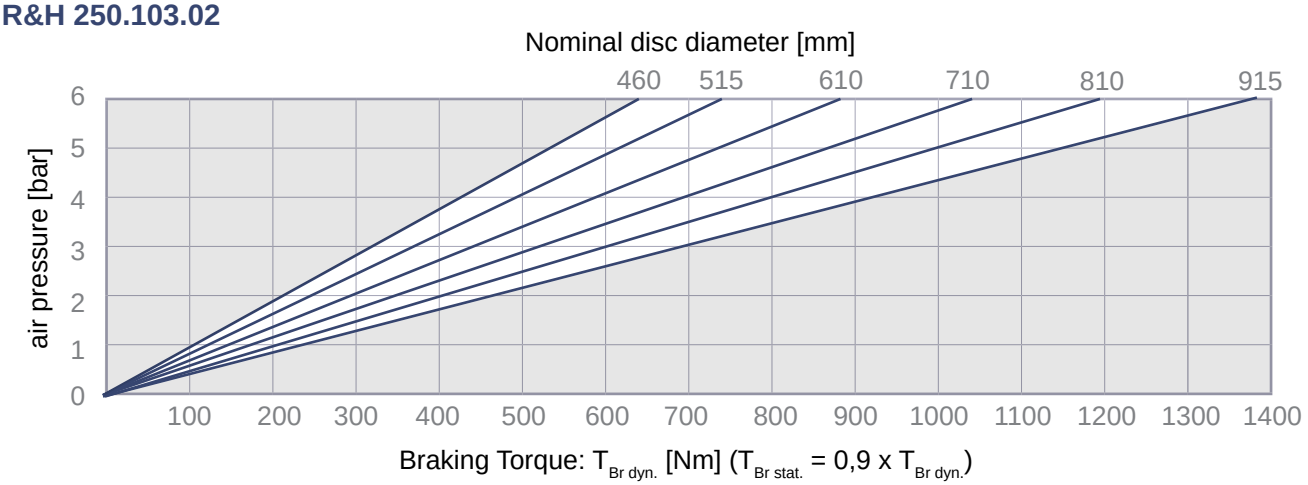

R&H 250.105.02

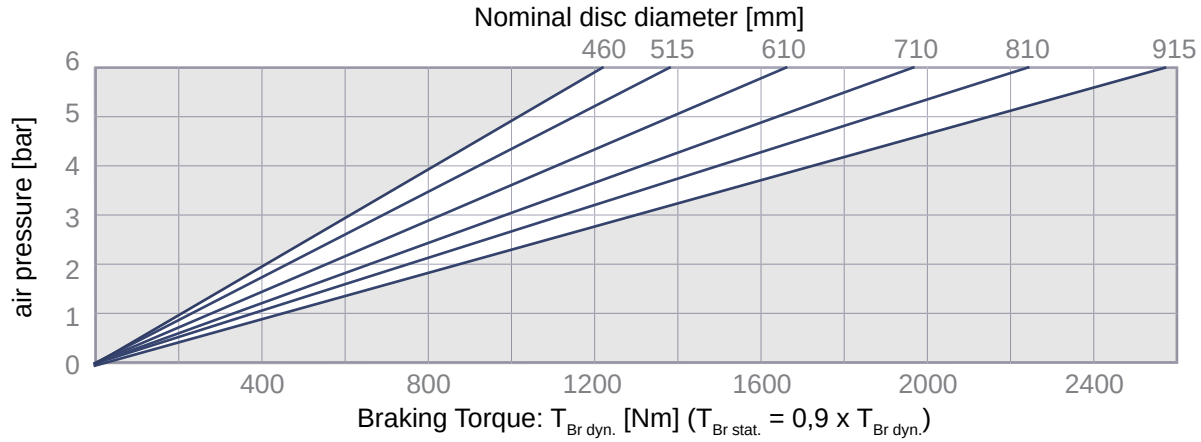

R&H 250.107.02

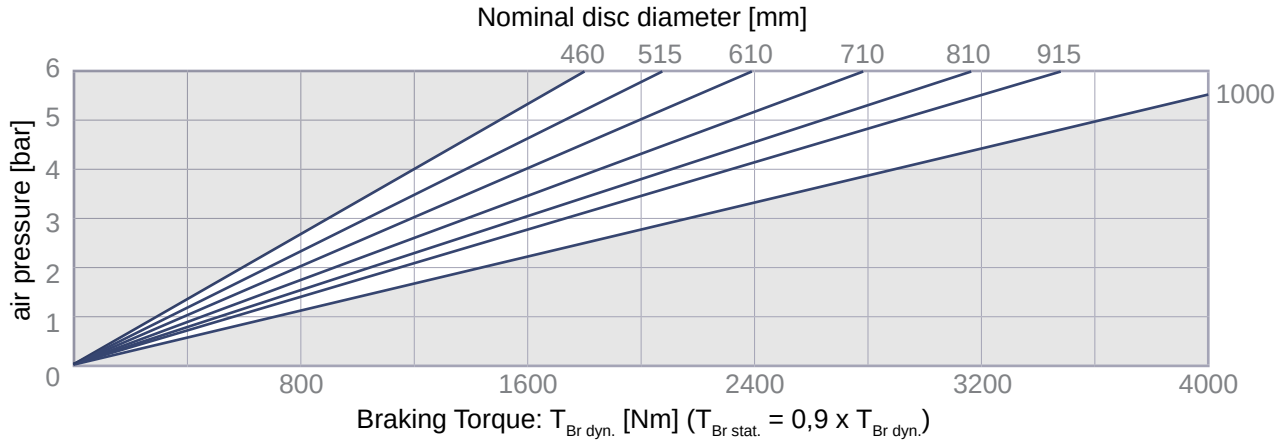

Brake Type R&H 250.10X.02

pneumatically applied

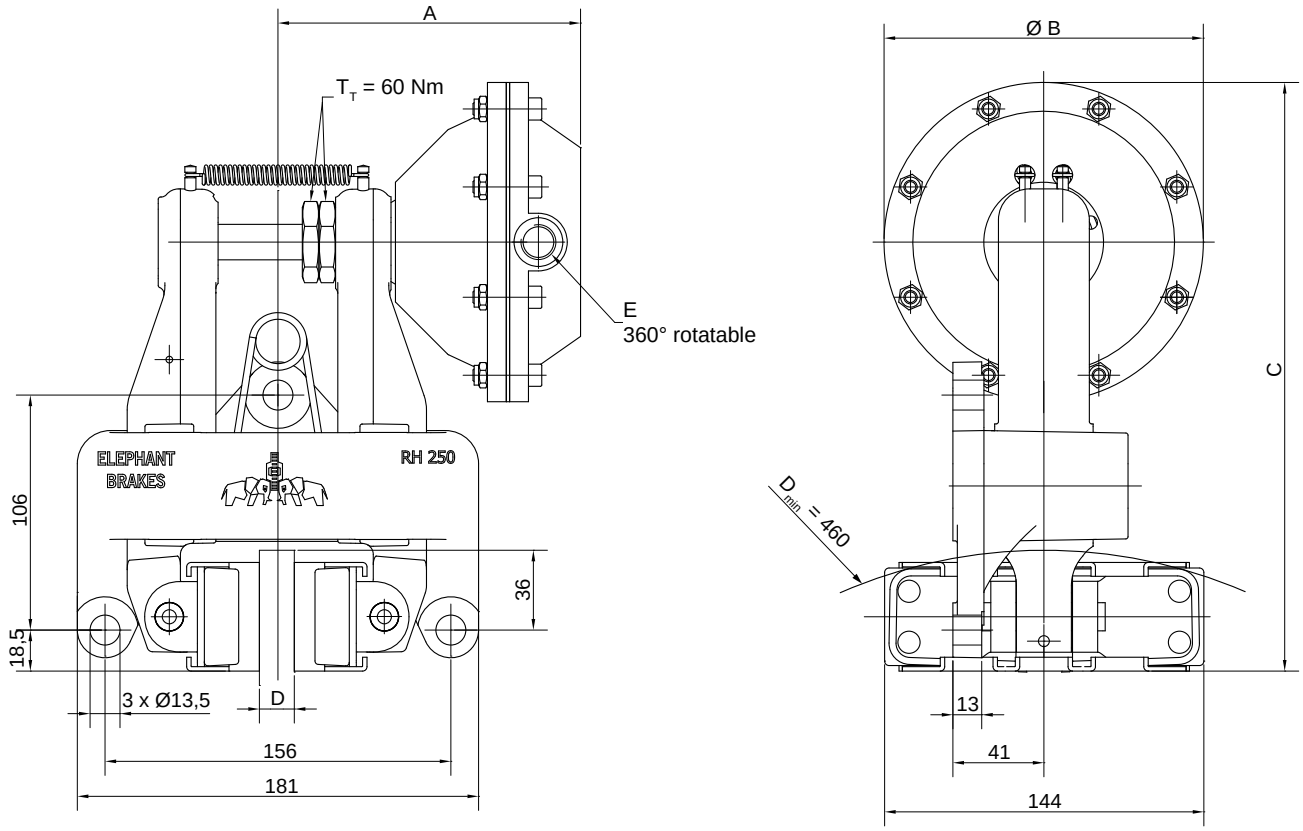

Mounting position is horizontal. Please get in touch if different.

A right hand mounted thruster is standard – left hand mounted please state with order.

Type	Part-No.	A [mm]	B [mm]	C [mm]	D [mm]	E	V / stroke [cm³]	Mass [kg]
R&H 250.102.02	10061	160	97	242	12,7	G 1/4“	0,07	7,9
R&H 250.102.02 short.	10062	157			25,4			
R&H 250.103.02	10052	150	120	254	12,7		0,15	8
R&H 250.103.02 short.	10053	147			25,4			
R&H 250.105.02	10040	150	144	266	12,7	G 3/8“	0,30	8,4
R&H 250.105.02 short.	10041	147			25,4			
R&H 250.107.02	10048	160	180	284	12,7		0,43	9,2
R&H 250.107.02 short.	10049	157			25,4			

Brake Type R&H 250.10X.01

pneumatically applied

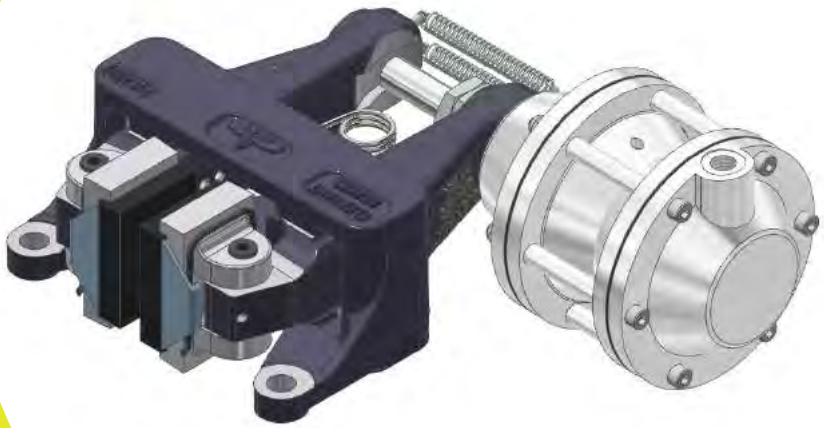

R&H 250.104.01

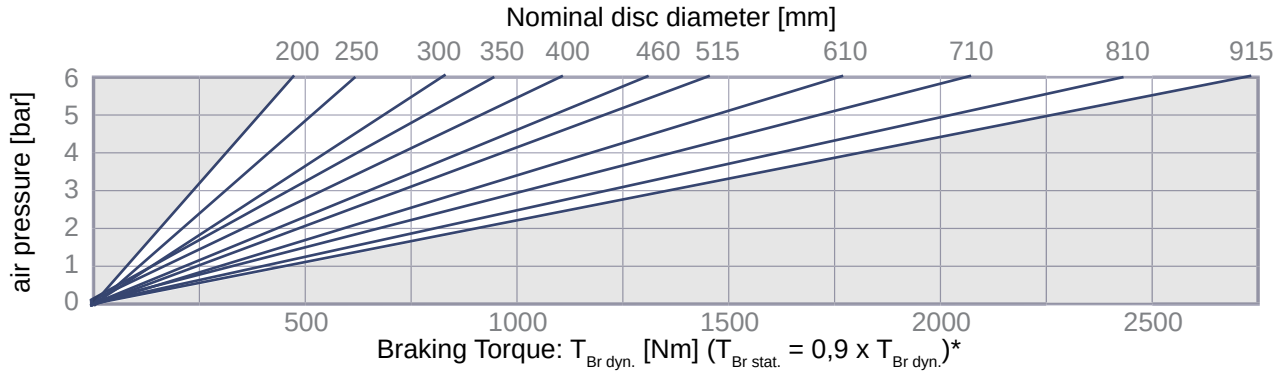

R&H 250.106.01

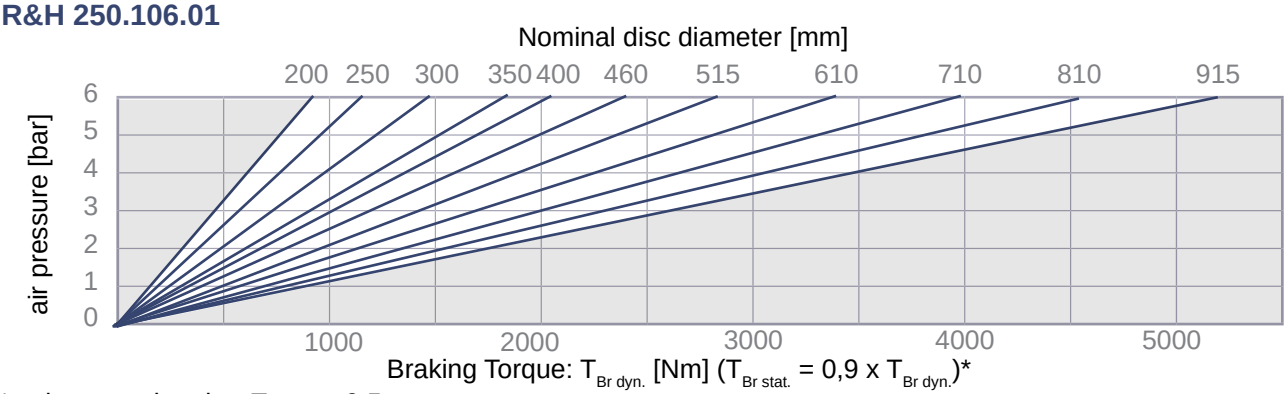

* using one chamber $T_{Br\ dyn.}$ x 0,5

Brake Type R&H 250.10X.01

pneumatically applied

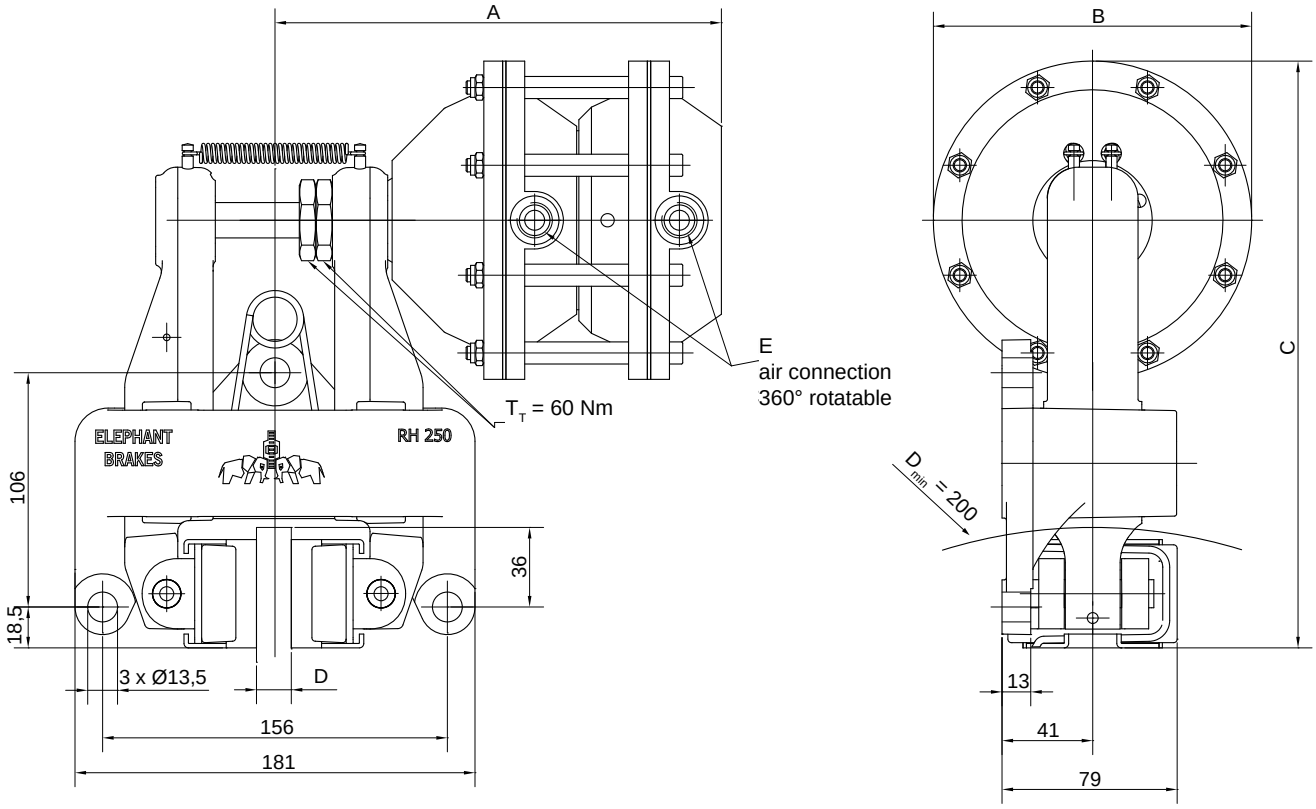

Mounting position is horizontal. Please get in touch if different.

A right hand mounted thruster is standard – left hand mounted please state with order.

Type	Part-No.	A [mm]	Ø B [mm]	C [mm]	D [mm]	E	V / stroke [cm³]	Mass [kg]
R&H 250.104.01	10054	228	120	254	12,7	2 x G 1/4“	2 x 0,07	8,5
R&H 250.104.01 short.	10055	225			25,4			
R&H 250.106.01	10042	228	144	266	12,7	2 x G 3/8“	2 x 0,15	9,2
R&H 250.106.01 short.	10043	225			25,4			

Brake Type R&H 250.10X.02

pneumatically applied

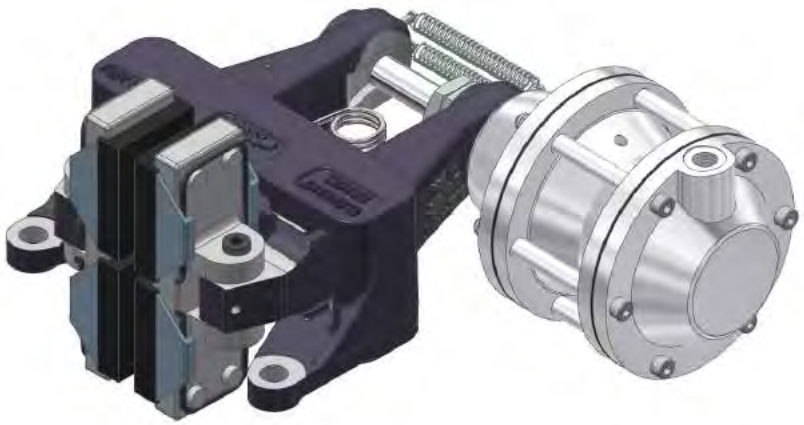

R&H 250.104.02

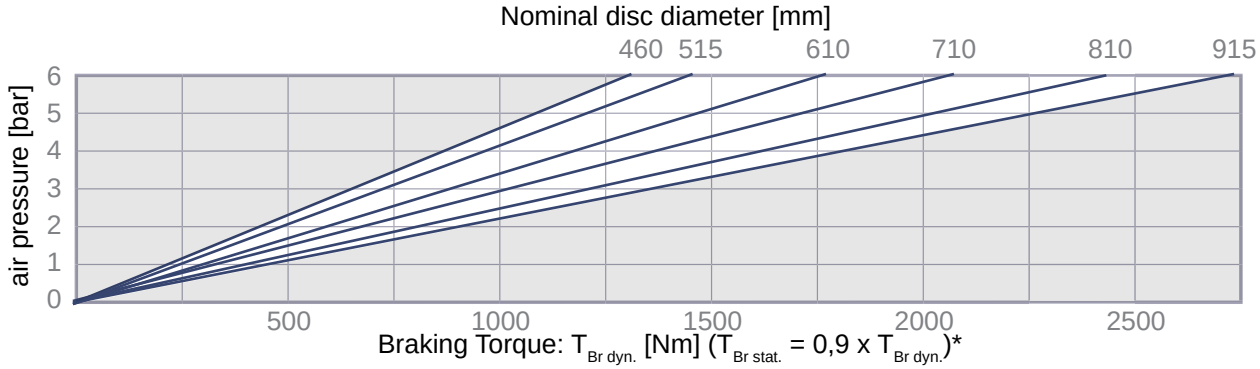

R&H 250.106.02

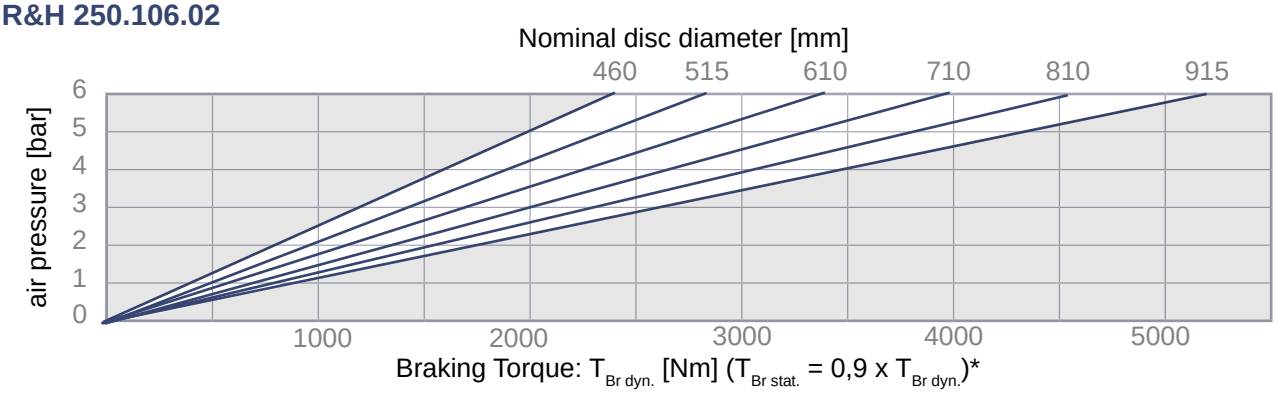

* using one chamber $T_{Br\ dyn.}$ x 0,5

Brake Type R&H 250.10X.02

pneumatically applied

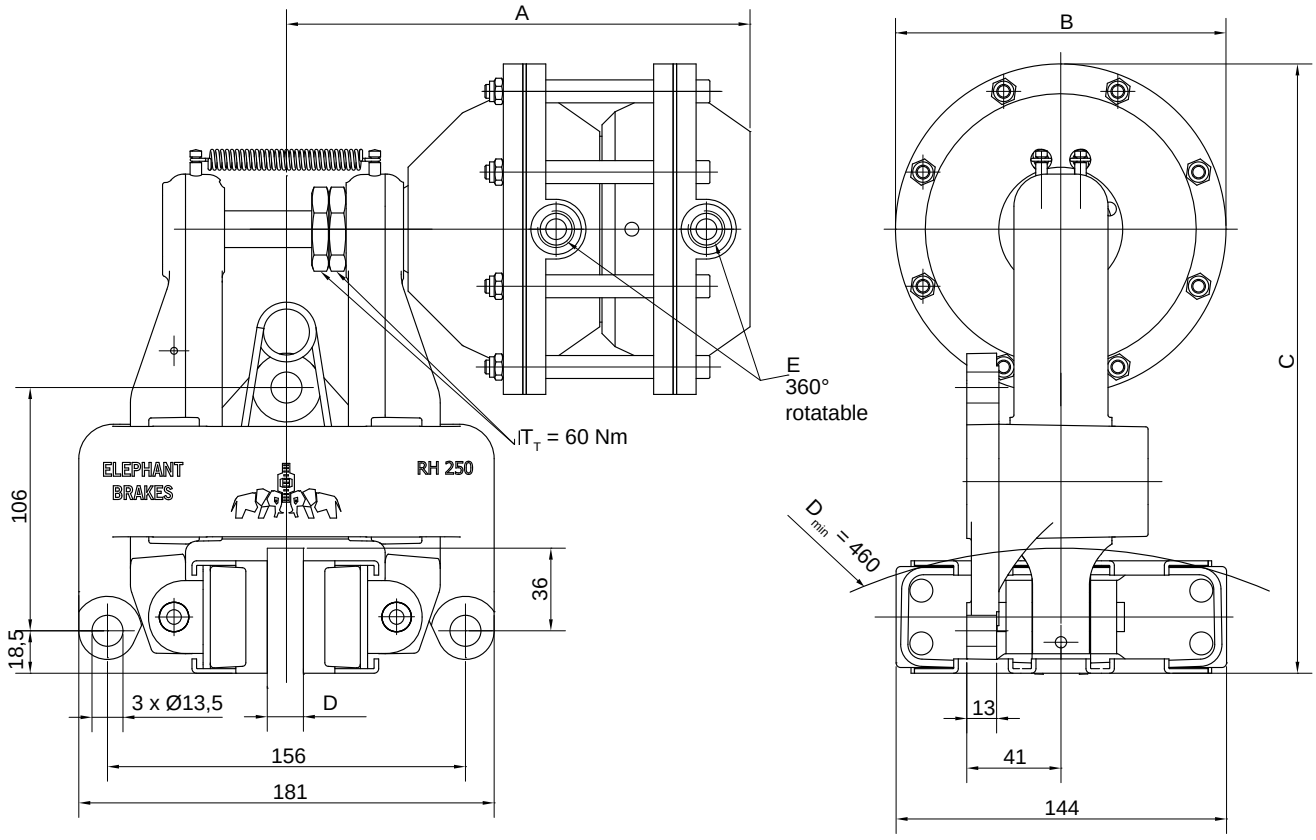

Mounting position is horizontal. Please get in touch if different.
A right hand mounted thruster is standard – left hand mounted please state with order.

Type	Part-No.	A [mm]	B [mm]	C [mm]	D [mm]	E	V / stroke [cm³]	Mass [kg]
R&H 250.104.02	10056	228	120	254	12,7	2 x G 1/4“	2 x 0,07	9,1
R&H 250.104.02 short.	10057	225			25,4			
R&H 250.106.02	10044	228	144	266	12,7	2 x G 3/8“	2 x 0,15	9,8
R&H 250.106.02 short.	10045	225			25,4			

Brake Type R&H 300.10X.04

pneumatically applied

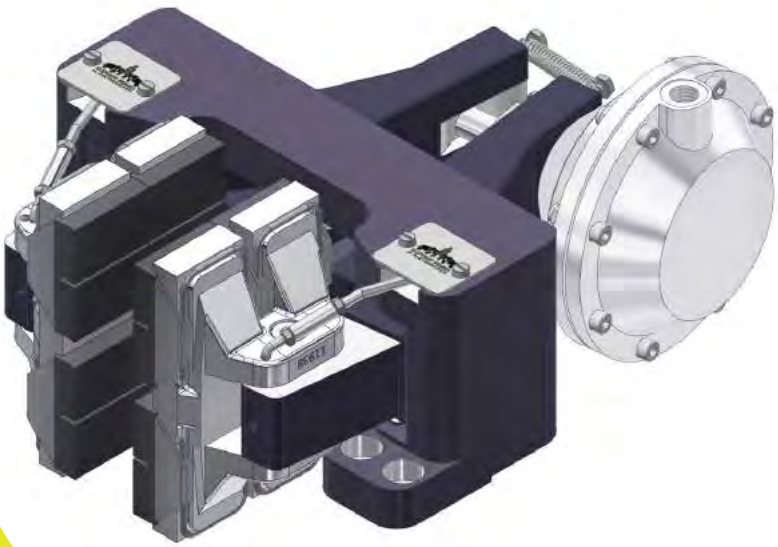

R&H 300.105.04 / R&H 300.105.04 short.

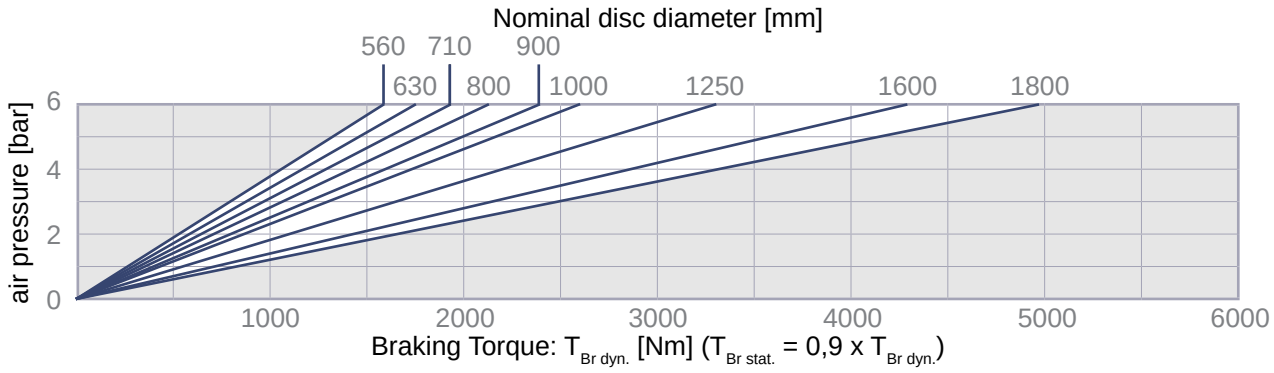

R&H 300.107.04 / R&H 300.107.04 short.

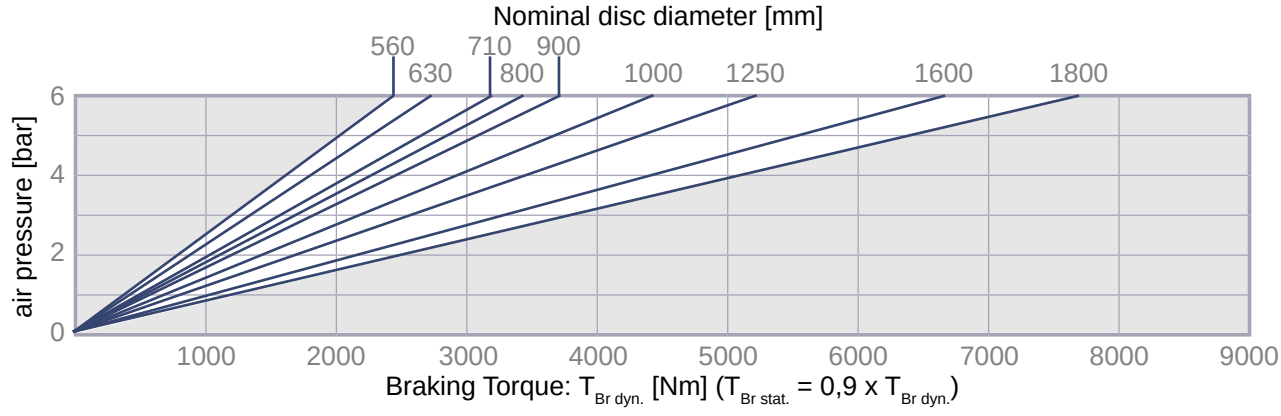

Brake Type R&H 300.10X.04

pneumatically applied

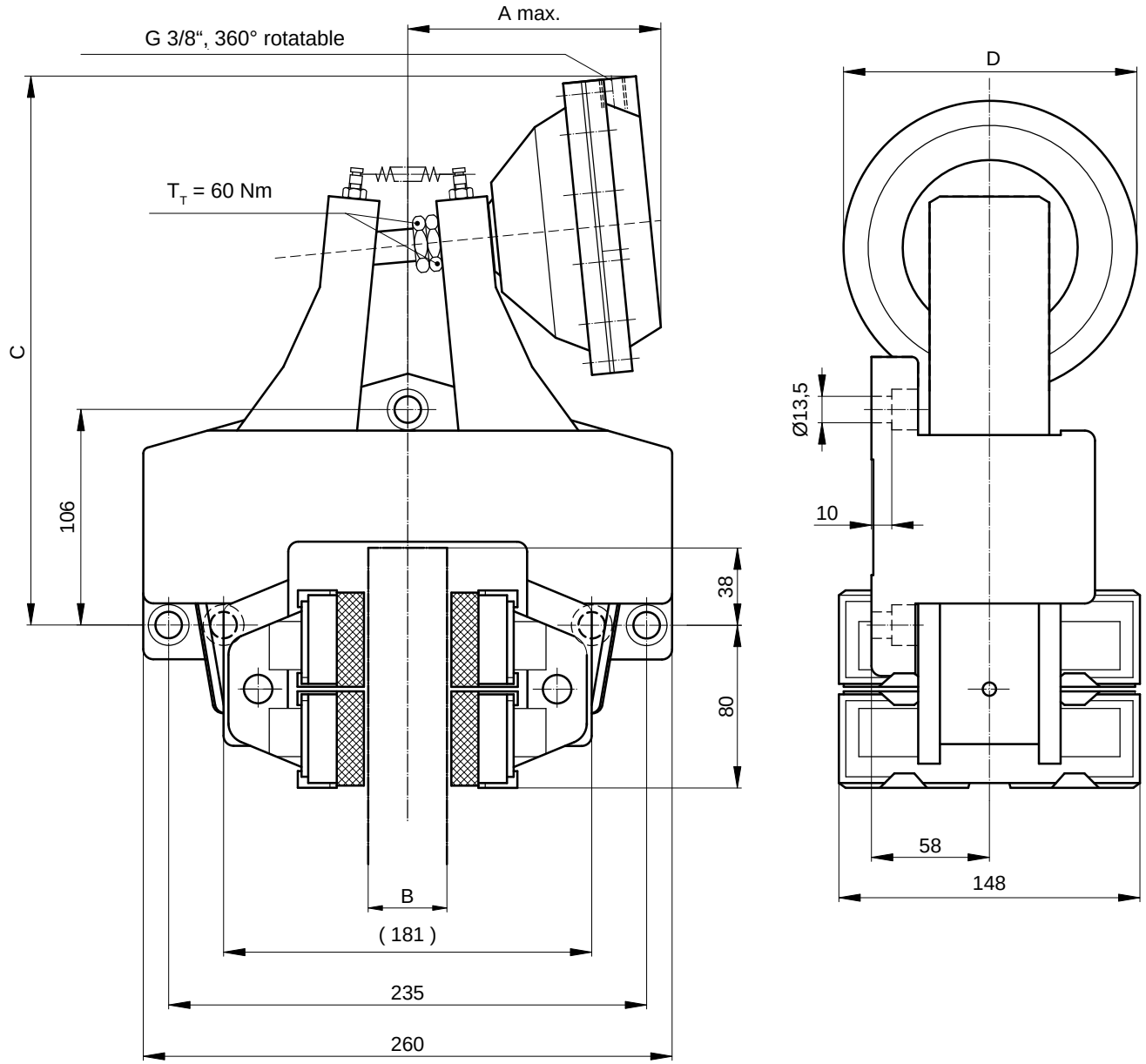

Mounting position is horizontal. Please get in touch if different.

A right hand mounted thruster is standard – left hand mounted please state with order.

Type	Part-No.	$A_{max.}$ [mm]	B [mm]	C [mm]	D [mm]	V / stroke [dm³]	Mass [kg]
R&H 300.105.04	11785	155	30	260	144	0,30	23,2
R&H 300.105.04 short.	11786	145	38	270			
R&H 300.107.04	11787	160	30	280	180	0,42	24
R&H 300.107.04 short.	11788	150	38	290			

Brake Type R&H 300.10X.04

pneumatically applied

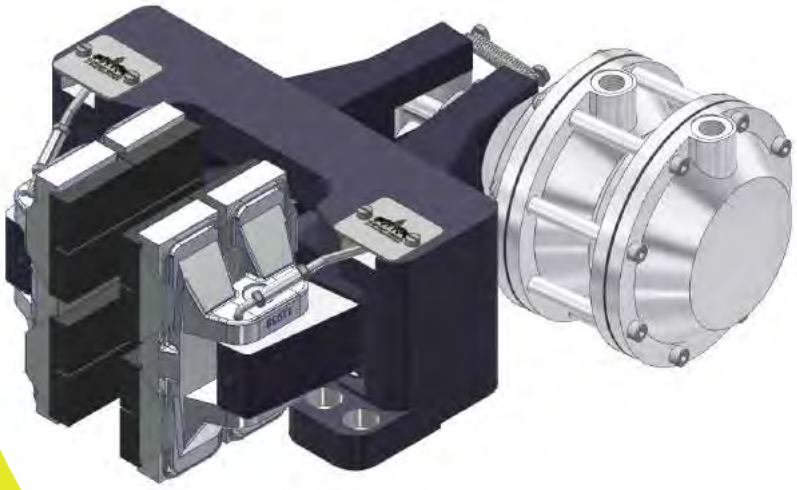

R&H 300.106.04 / R&H 300.106.04 short.

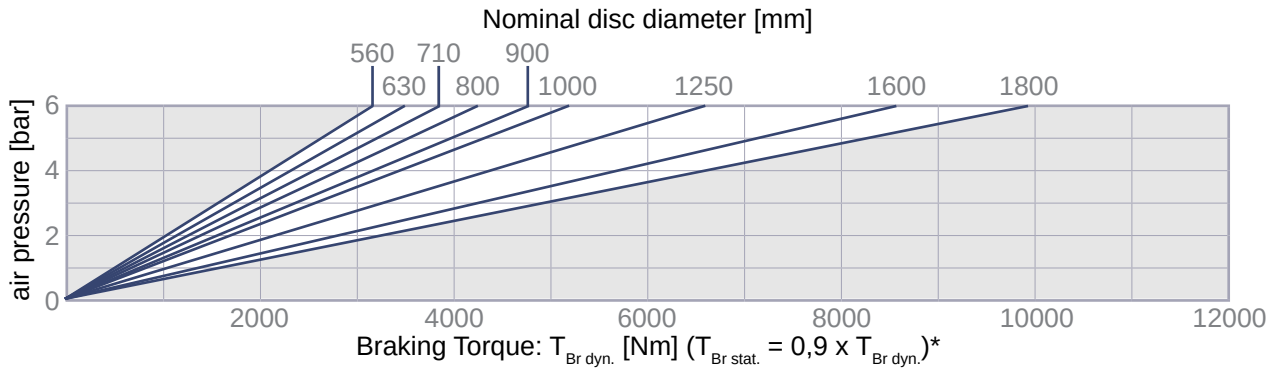

R&H 300.108.04 / R&H 300.108.04 short.

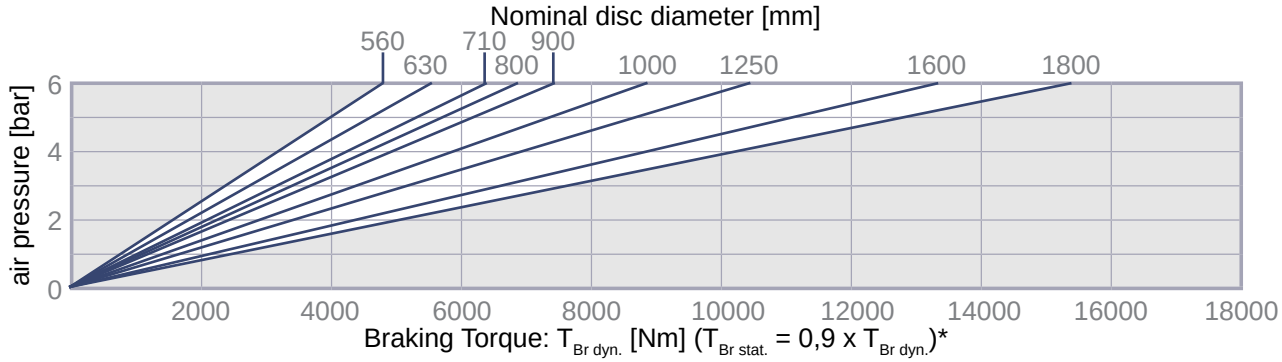

* using one chamber $T_{Br\ dyn.}$ x 0,5

Brake Type R&H 300.10X.04

pneumatically applied

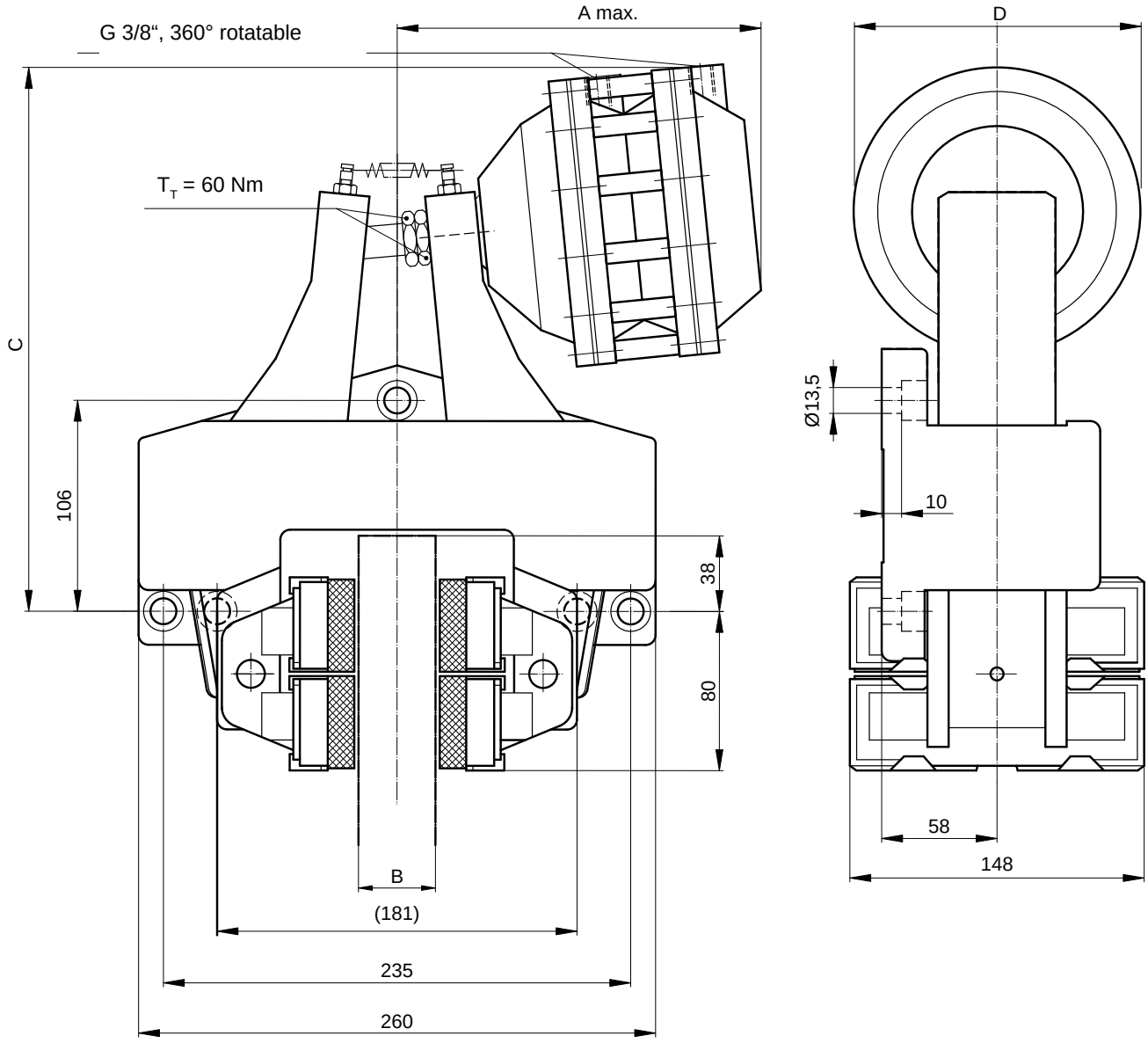

Mounting position is horizontal. Please get in touch if different.

A right hand mounted thruster is standard – left hand mounted please state with order.

Type	Part-No.	$A_{max.}$ [mm]	B [mm]	C [mm]	D [mm]	V / stroke [dm³]	Mass [kg]
R&H 300.106.04	11765	220	30	264	144	0,30	24,5
R&H 300.106.04 short.	11766	210	38	274		0,30	
R&H 300.108.04	11767	225	30	284	180	0,42	26
R&H 300.108.04 short.	11768	215	38	294		0,42	

ELEPHANT BRAKES BY RIETSCHOTEN

Brake Type R&H 350.135.01

pneumatically applied

Part-No.: 14604

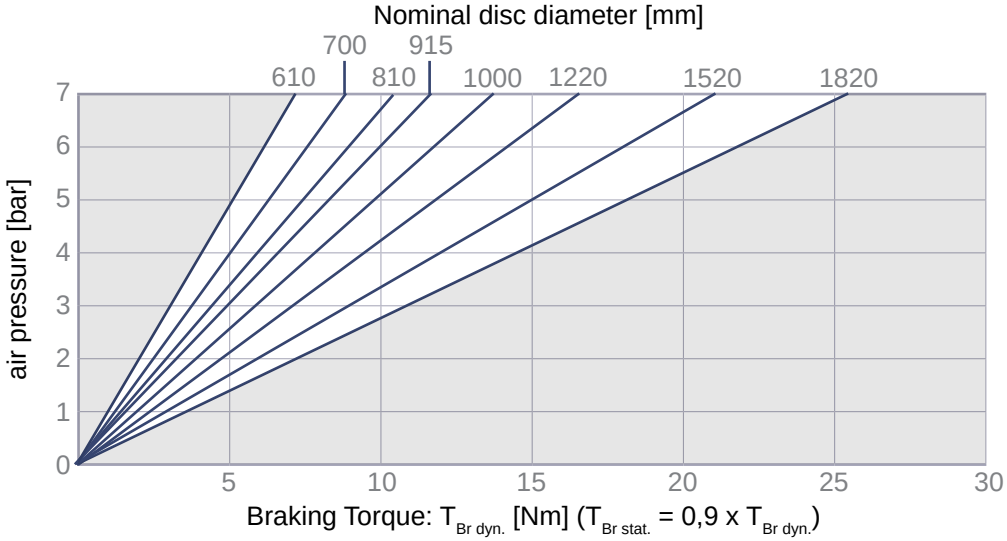

Mass: 49,7 kg

V / stroke: 2 dm^3

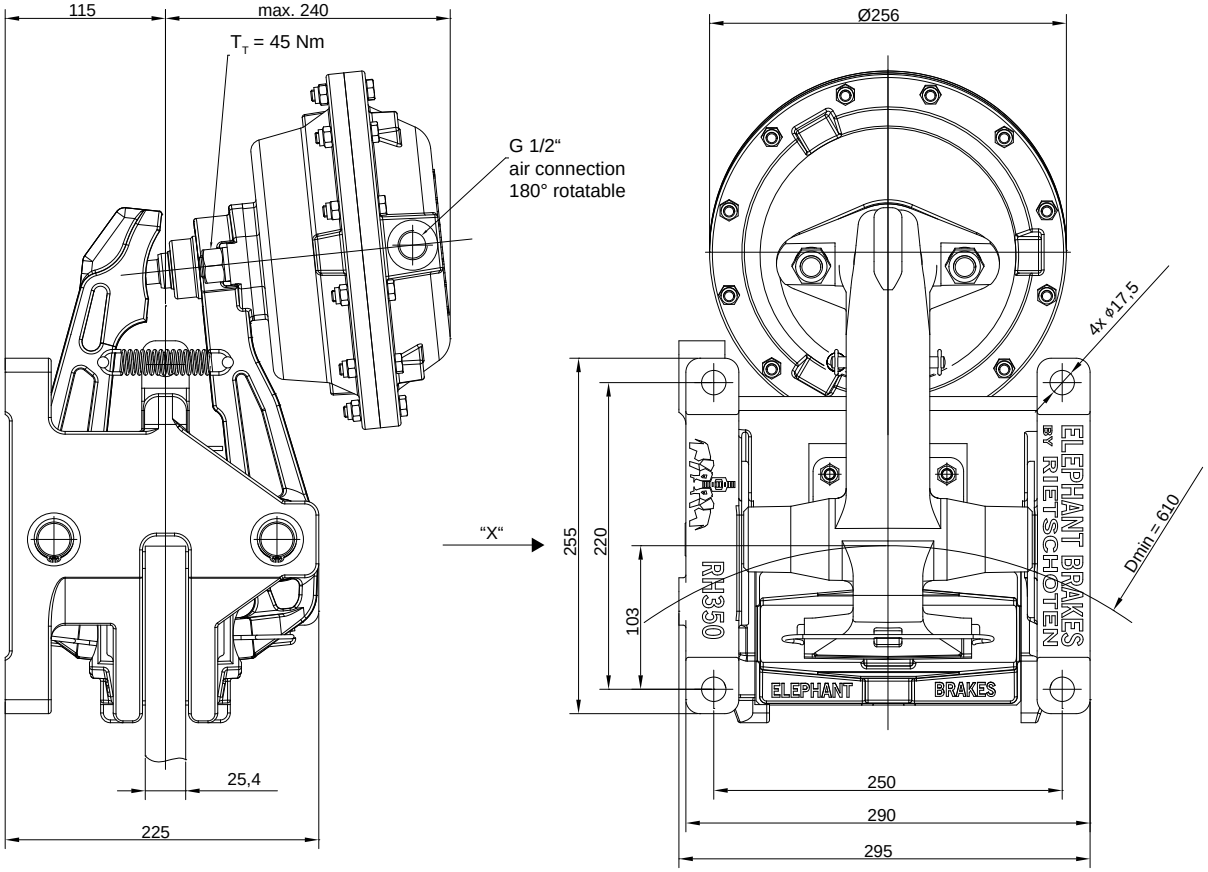

view „X“
mounting surface

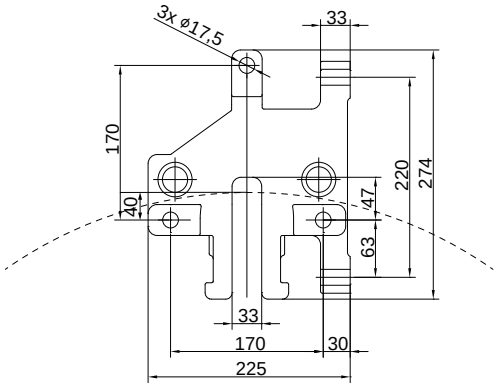

Mounting position is horizontal. Please get in touch if different.

A right hand mounted thruster is standard – left hand mounted please state with order.

hydraulically applied brakes

This list makes no claim to completeness. It has been compiled in accordance wuth the manufacturer recommendations. The manufacturers are listed in alphabetical order, making no implications about the product quality.

Producer	Name	Kin. viscosity at 40° C [mm²/s = cSt]
ARAL	ARAL ÖL VITAM-GF46	46
AVIA	RCL 32	32
BP	BP Energol HLP 46	47,4
DEFROL	DEFROL I SO-VG46/ -68	46 / 68
ESSO	NUTO H 46	44
FINA	FINA Hydran 68 (HLP)	68
FUCHS DEA	Plantohyd*	47,4
MOBIL	Mobil DTE 26	64
TEXACO	Texaco Oil HDB 68	46

* bio-degradable

Brake Type R&H 100.25X.01

hydraulically applied

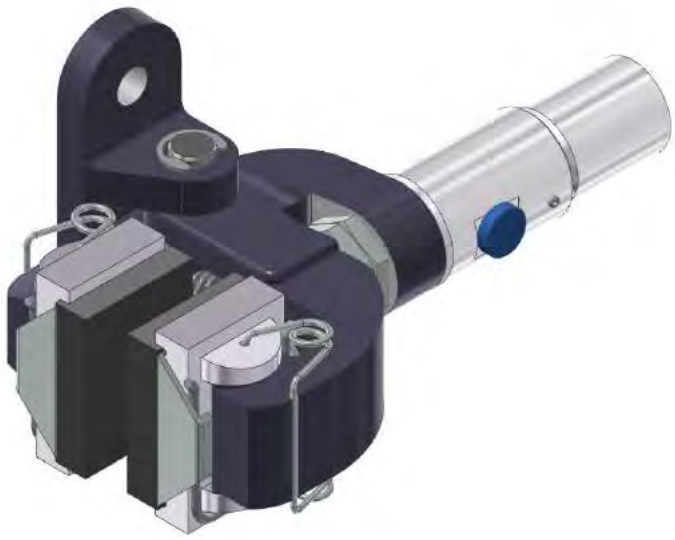

R&H 100.250.01

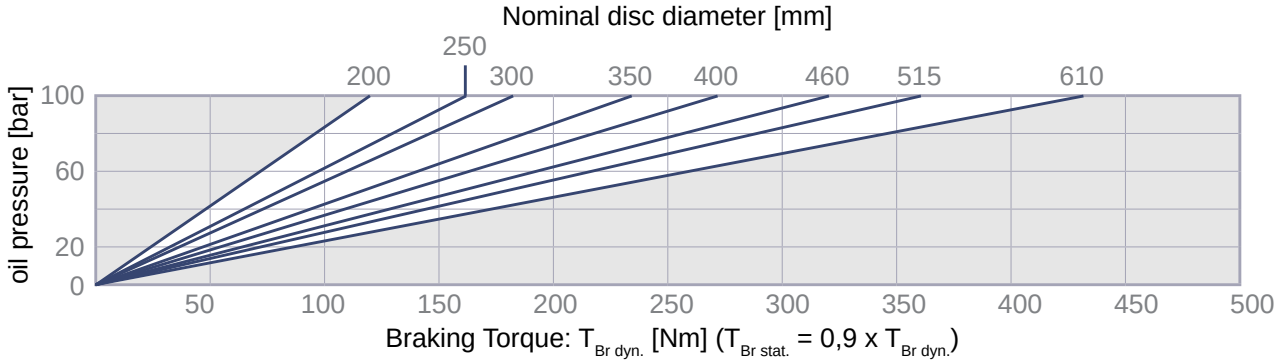

R&H 100.251.01

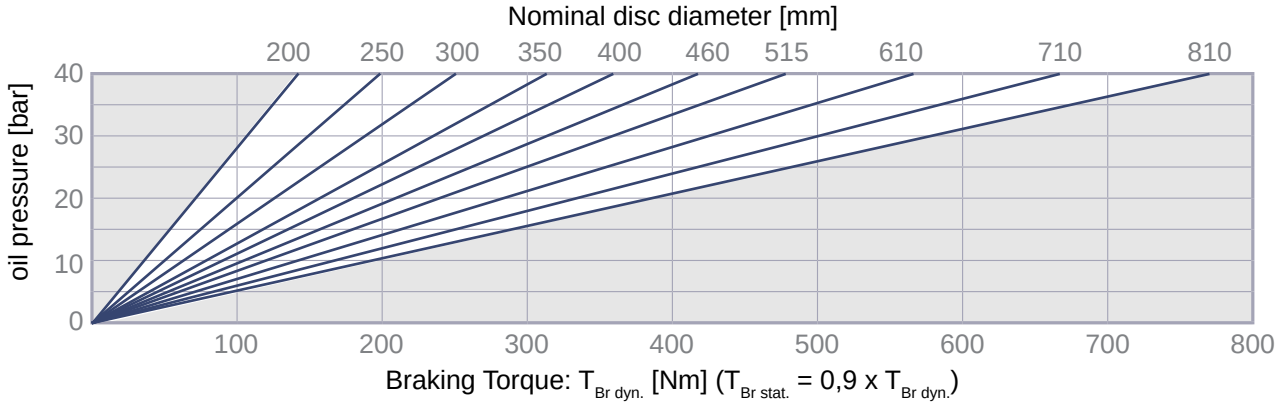

Brake Type R&H 100.25X.01

hydraulically applied

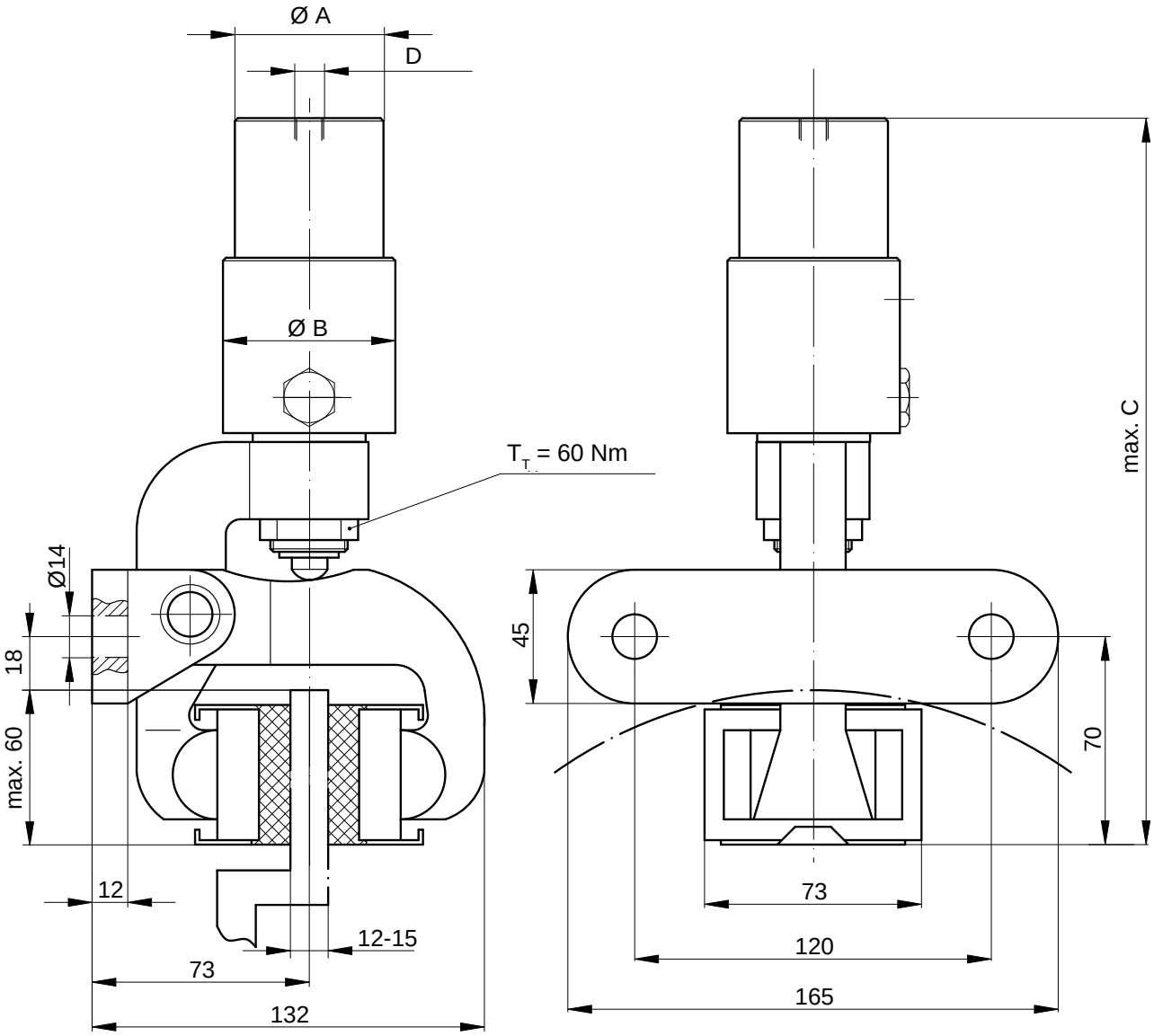

Mounting position is horizontal. Please get in touch if different.

Type	Part-No.	Ø A [mm]	Ø B [mm]	max. C [mm]	D	max. oil demand per braking [cm³]	Mass [kg]
R&H 100.250.01	10391	32	40	254	G 1/8“	20	3,8
R&H 100.251.01	10392	50	58	245	G 1/4“	50,4	4,4

For use with mineral oil.

Brake Type R&H 200.25X.01

hydraulically applied

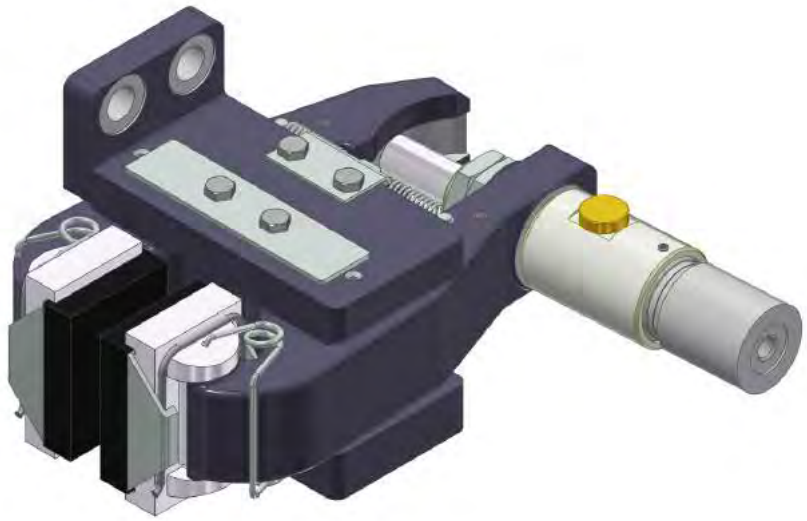

R&H 200.250.01

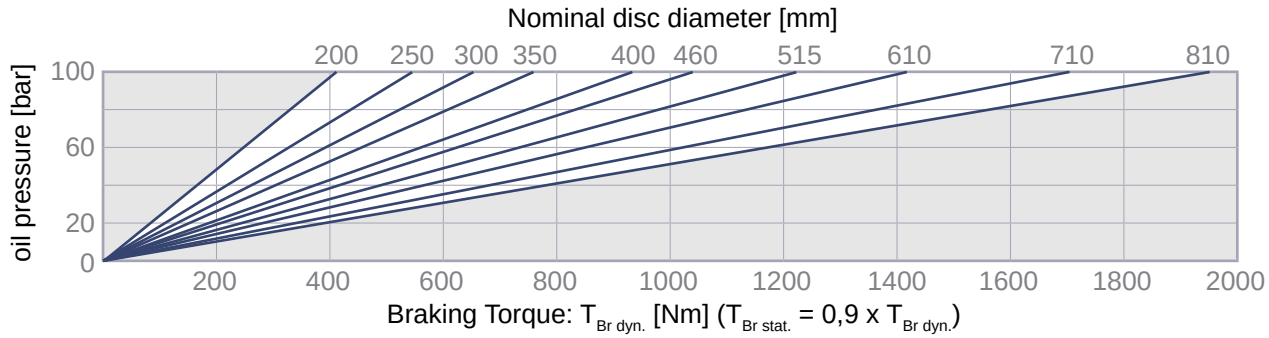

R&H 200.251.01

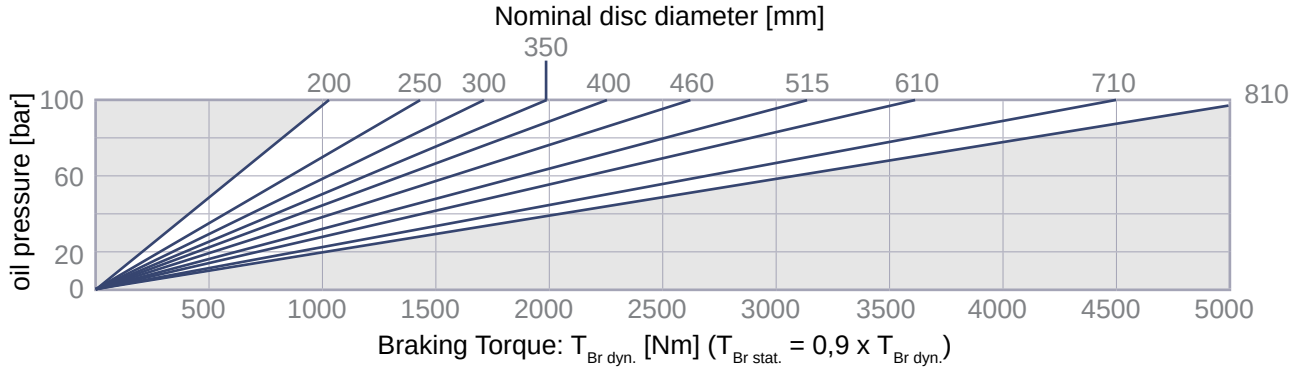

Brake Type R&H 200.25X.01

hydraulically applied

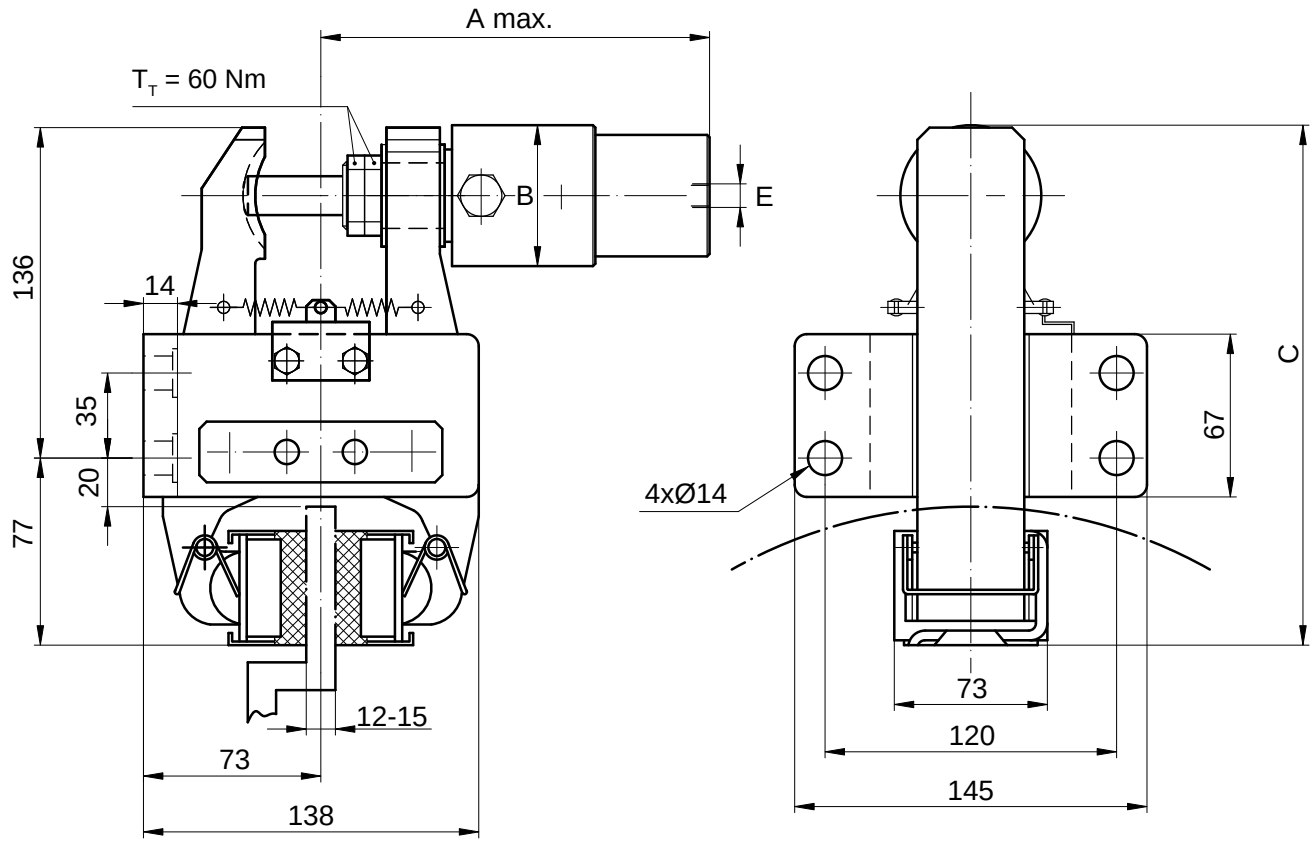

Mounting position is horizontal. Please get in touch if different.
A right hand mounted actuator is standard – „flange side“ mounted please state with order.

Type	*Part-No.*	A [mm]	Ø B [mm]	C [mm]	E	V / stroke [cm³]	Mass [kg]
R&H 200.250.01	***11149***	184	40	213	G 1/8“	20	8,4
R&H 200.251.01	***11150***	175	58	216	G 1/4“	50	9,1

For use with mineral oil.

Brake Type R&H 2XX.25X.01

hydraulically applied

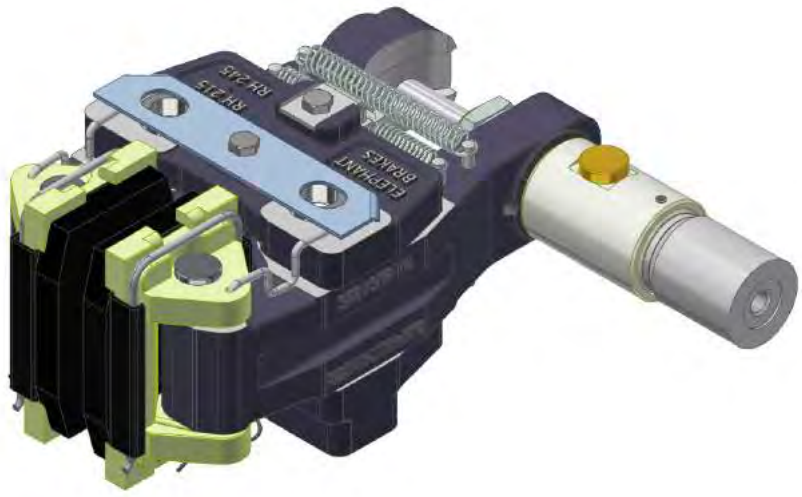

R&H 215.250.01 / R&H 225.250.01 / R&H 230.250.01

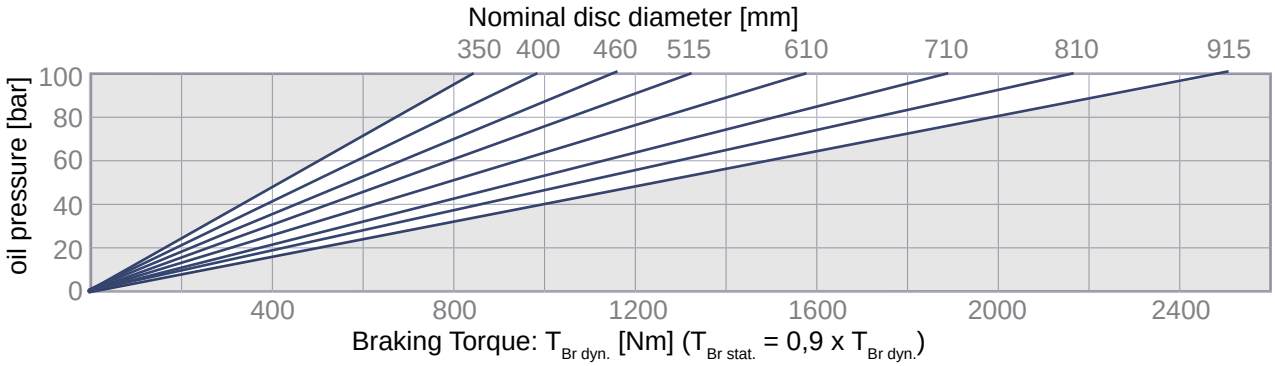

R&H 215.251.01 / R&H 225.251.01 / R&H 230.251.01

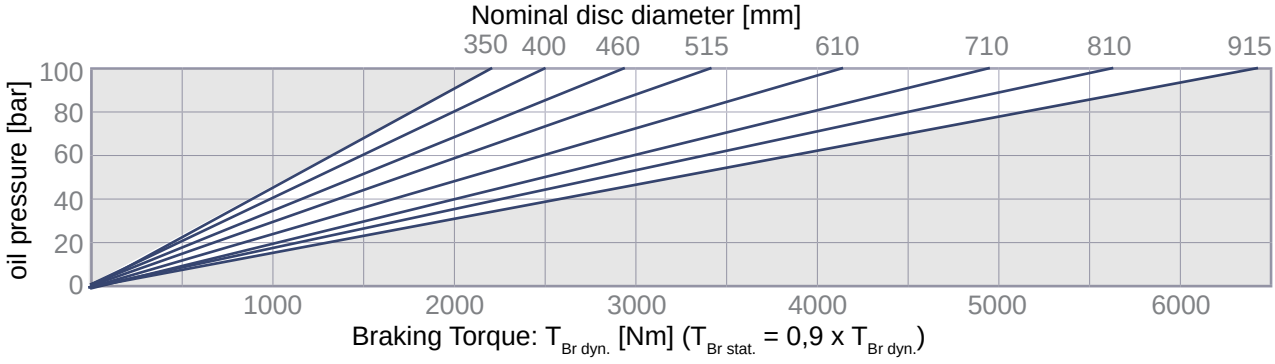

Brake Type R&H 2XX.25X.01

hydraulically applied

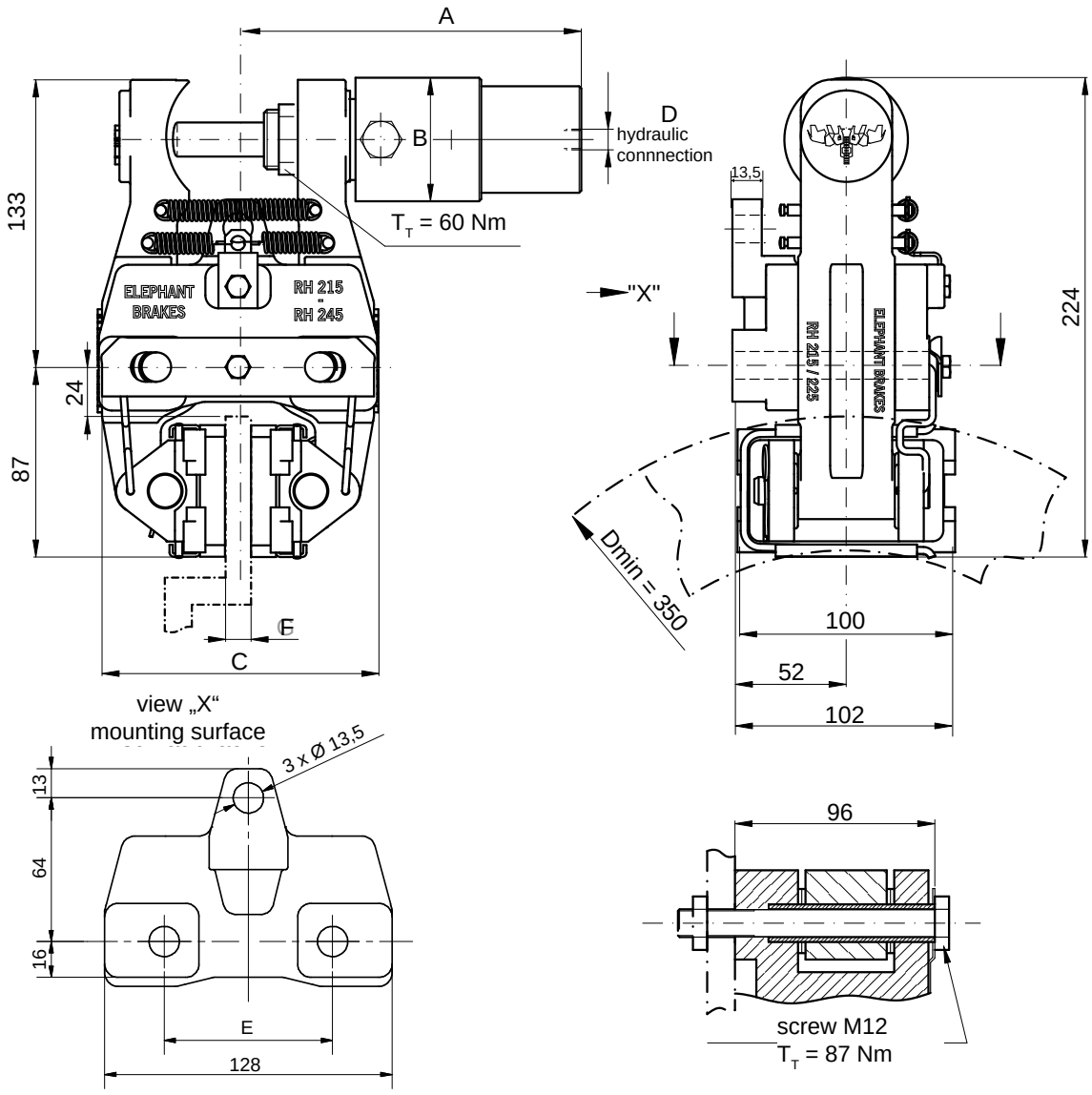

Mounting position is horizontal. Please get in touch if different.

A right hand mounted thruster is standard – left hand mounted please state with order.

Type	Part-No.	A [mm]	Ø B [mm]	C [mm]	D	E [mm]	F [mm]	max. V/stroke [cm³]	Mass [kg]
R&H 215.250.01	***10691***	195	40	130	G 1/8“	75	12-15	20	8,7
R&H 225.250.01	***11096***	199		140		84	25,4		
R&H 230.250.01	***10711***	195		144		75	30		8,9
R&H 215.251.01	***10692***	185	58	130	G 1/4“	75	12-15	50	9,4
R&H 225.251.01	***11097***	189		140		84	25,4		
R&H 230.251.01	***10712***	185		144		75	30		9,6

For use with mineral oil.

Brake Type R&H 250.25X.01

hydraulically applied

R&H 250.250.01

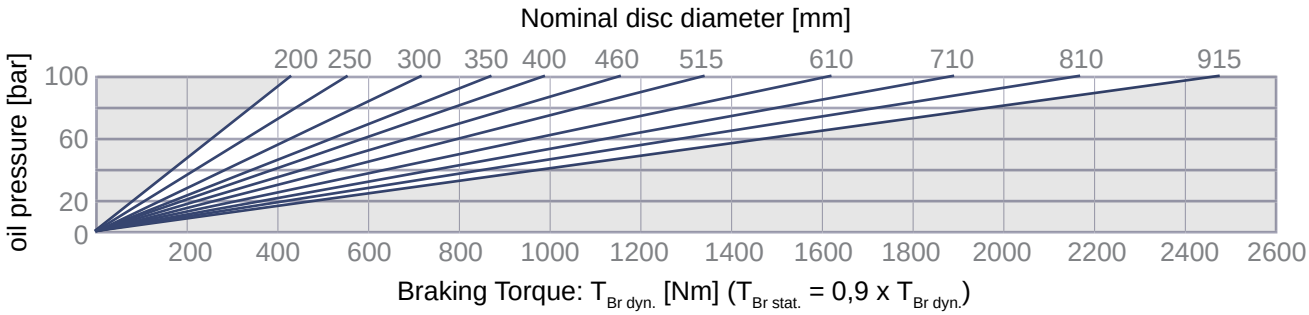

R&H 250.251.01

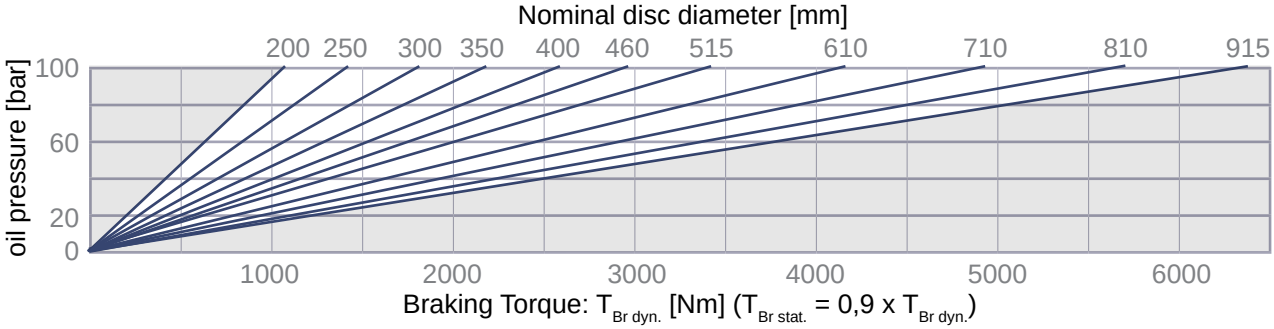

Brake Type R&H 250.25X.01

hydraulically applied

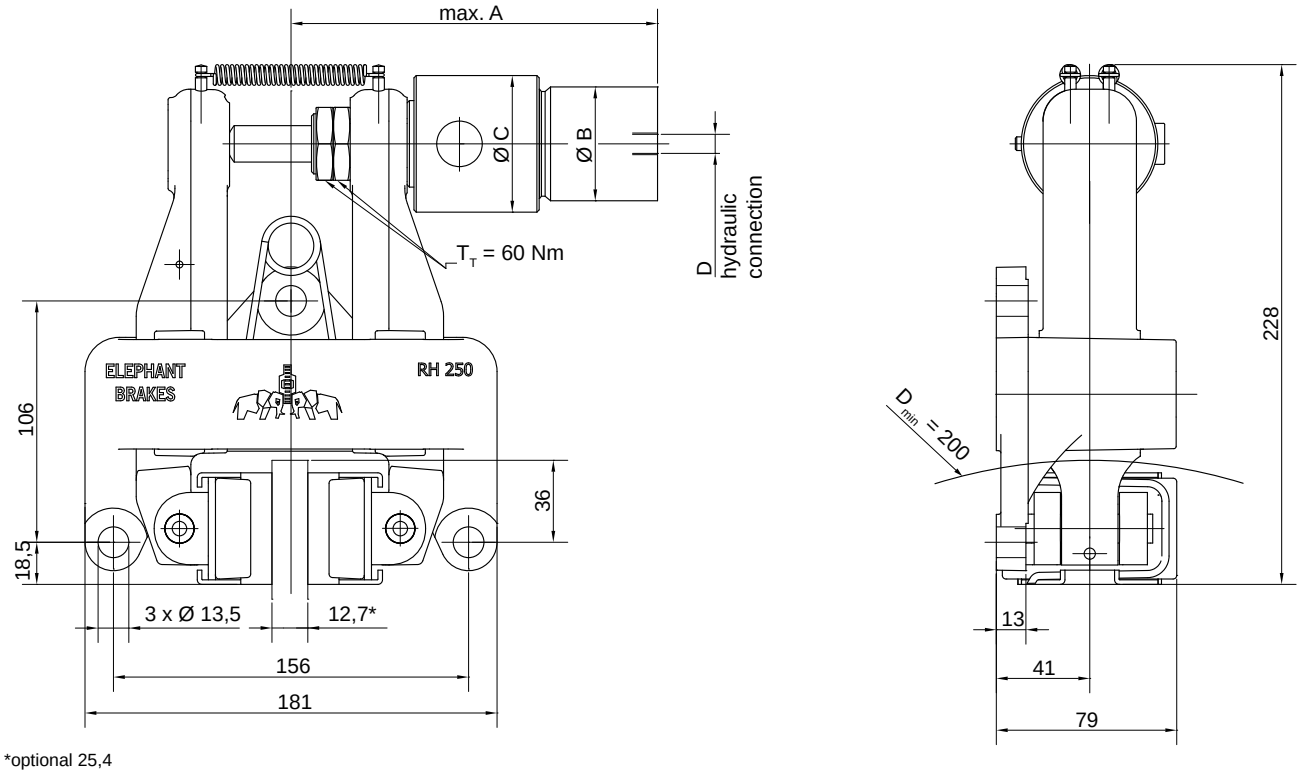

*optional 25,4

Mounting position is horizontal. Please get in touch if different.

A right hand mounted thruster is standard – left hand mounted please state with order.

Type	*Part-No.*	max. A [mm]	Ø B [mm]	Ø C [mm]	D	max. oil demand per braking [cm³]	Mass [kg]
R&H 250.250.01	***10070***	190	32	40	G 1/8“	15,7	7,5
R&H 250.251.01	***10073***	183	50	58	G 1/4“	50,4	8,2

For use with mineral oil.

Brake Type R&H 250.25X.02

hydraulically applied

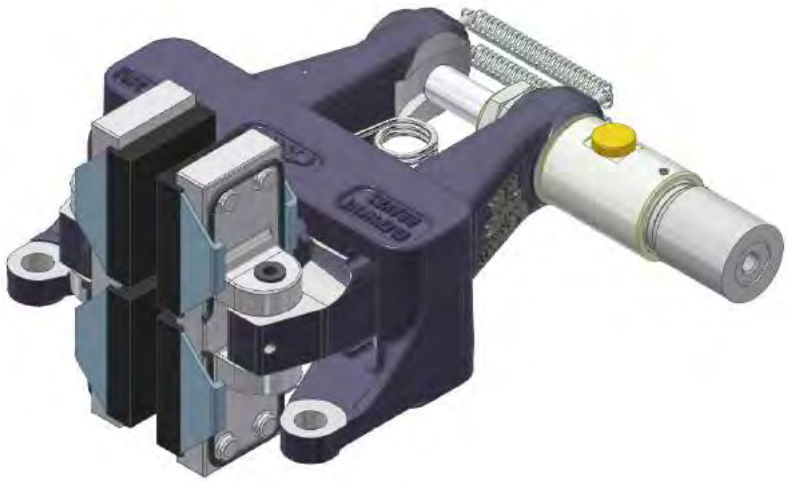

R&H 250.250.02

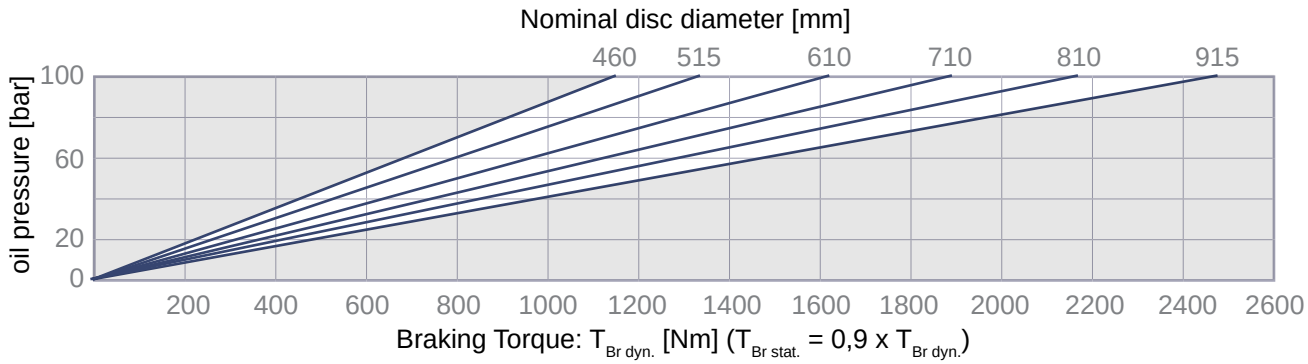

R&H 250.251.02

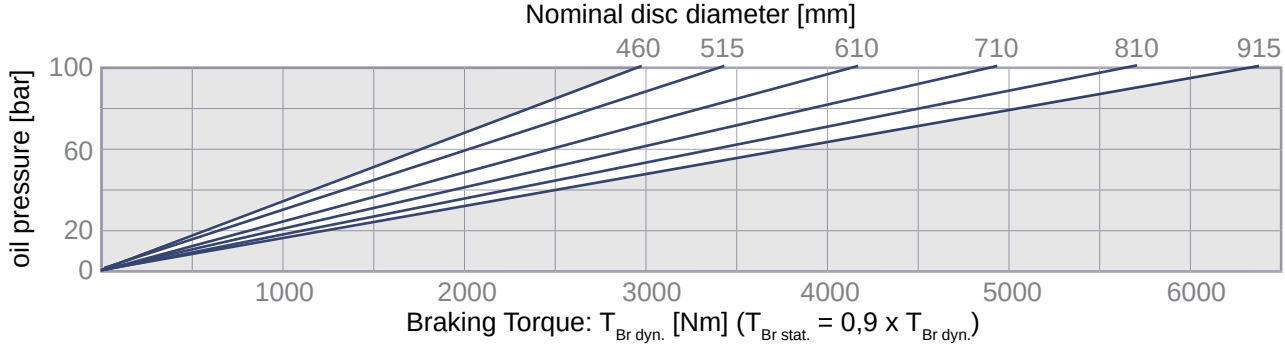

Brake Type R&H 250.25X.02

hydraulically applied

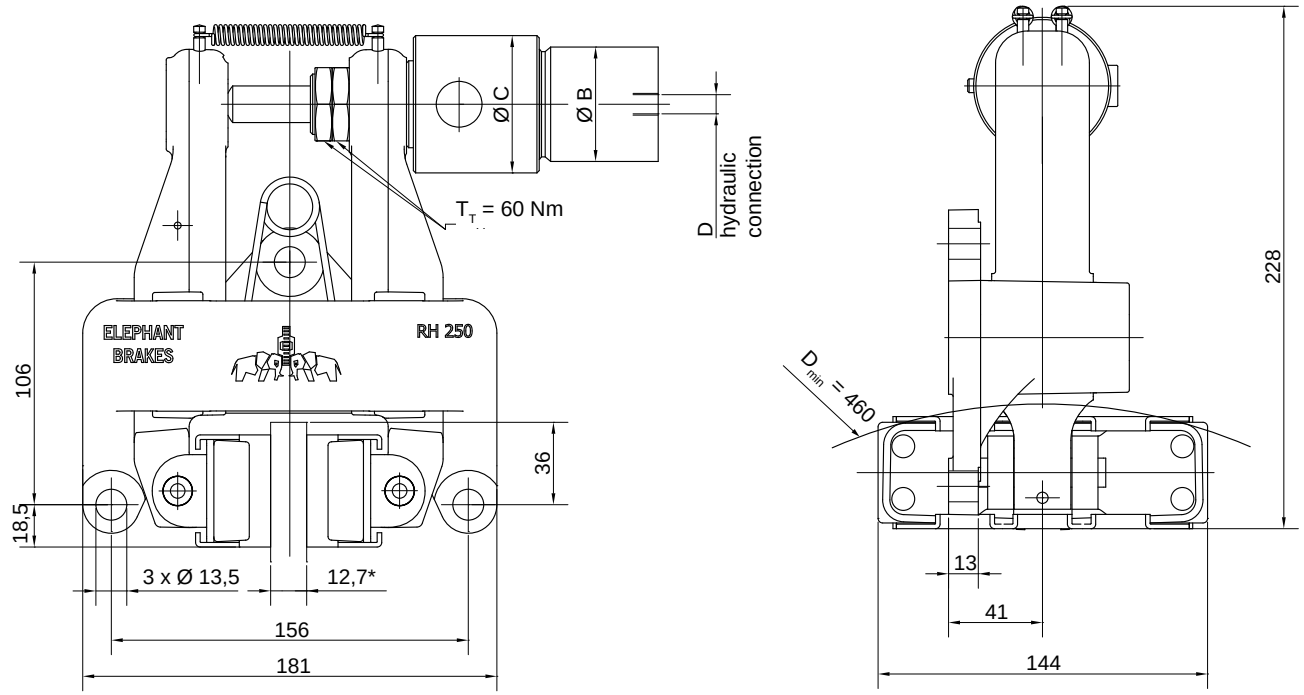

*optional 25,4

Mounting position is horizontal. Please get in touch if different.

A right hand mounted thruster is standard – left hand mounted please state with order.

Type	*Part-No.*	max. A [mm]	Ø B [mm]	Ø C [mm]	D	max. oil demand per braking [cm³]	Mass [kg]
R&H 250.250.02	***10072***	190	32	40	G 1/8“	15,7	8
R&H 250.251.02	***10074***	183	50	58	G 1/4“	50,4	8,7

For use with mineral oil.

Brake Type R&H 300.25X.04

hydraulically applied

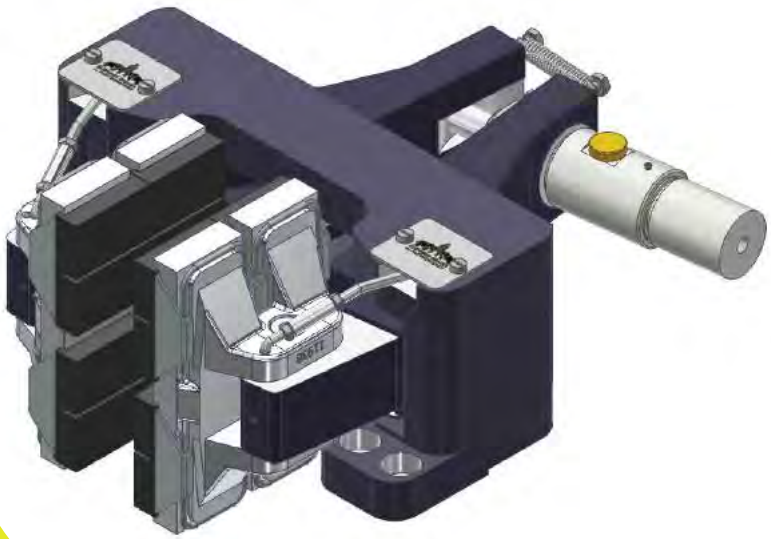

R&H 300.250.04

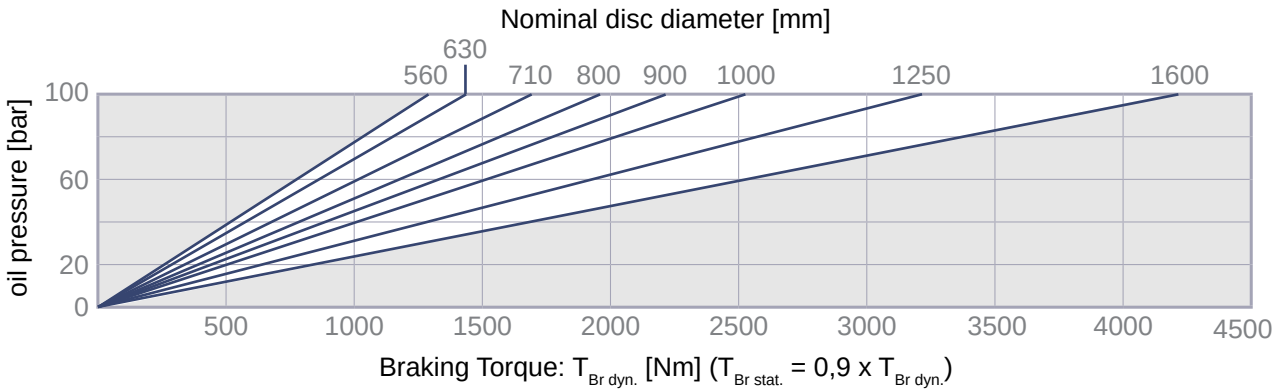

R&H 300.251.04 / R&H 300.251.04 short.

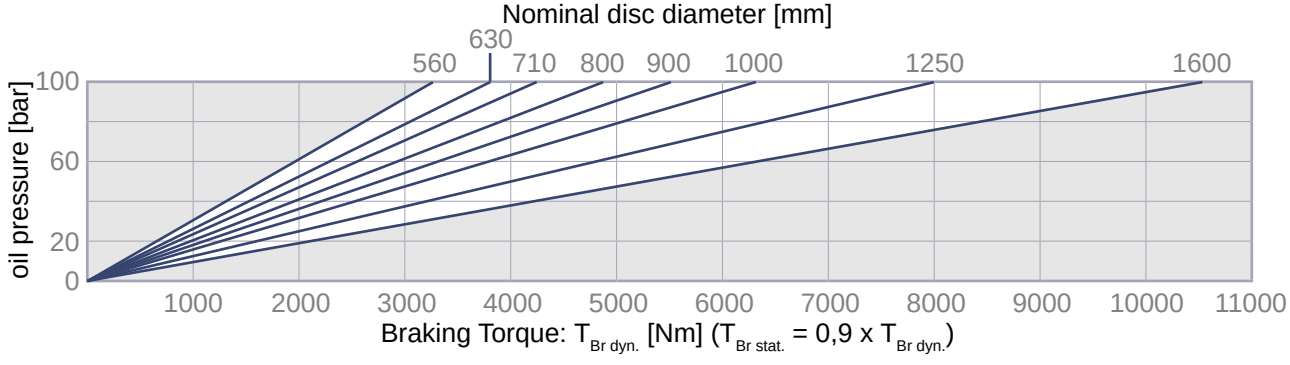

Brake Type R&H 300.25X.04

hydraulically applied

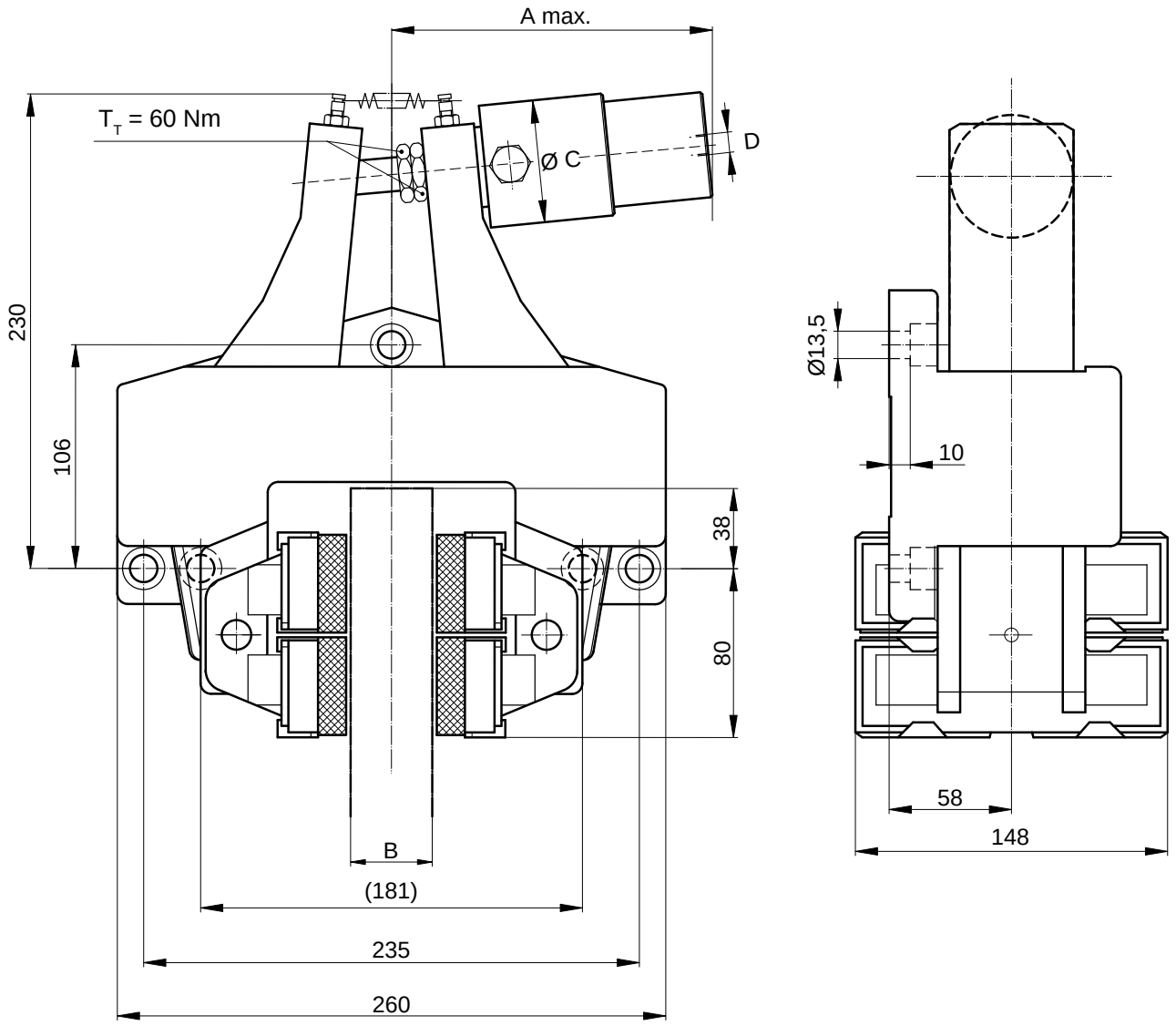

Mounting position is horizontal. Please get in touch if different.

A right hand mounted thruster is standard – left hand mounted please state with order.

Type	*Part-No.*	A [mm]	B [mm]	Ø C [mm]	D	max. V / stroke cm³	Mass [kg]
R&H 300.250.04	***12749***	180	30	40	G 1/8“	20	23
R&H 300.251.04	***12750***	170		58	G 1/4“	50	23,5
R&H 300.251.04 short.	***13451***	160	38				

For use with mineral oil.

Brake Type R&H 350.20X.01

hydraulically applied

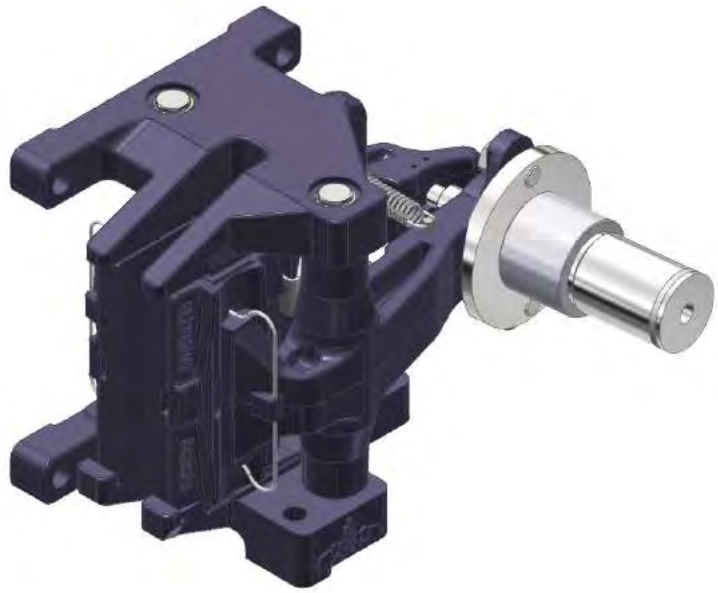

R&H 350.205.01

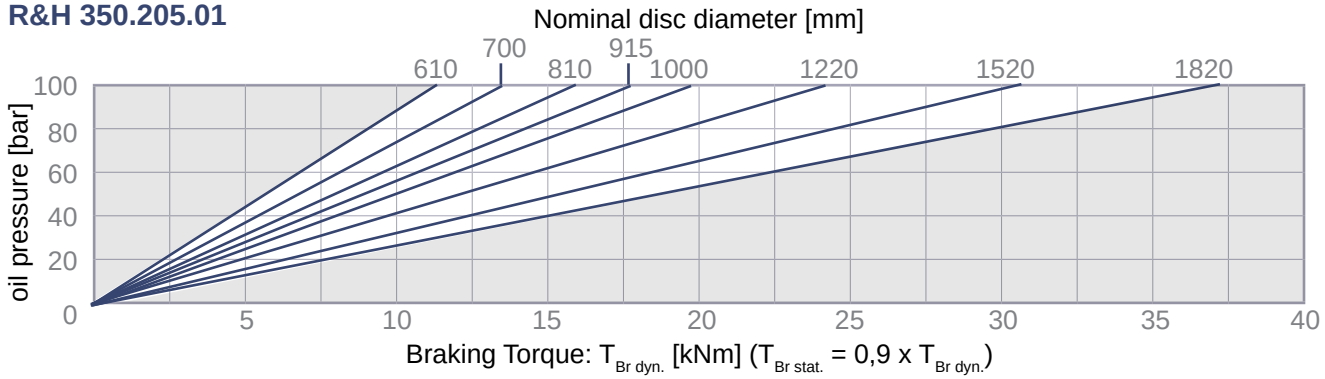

R&H 350.204.01

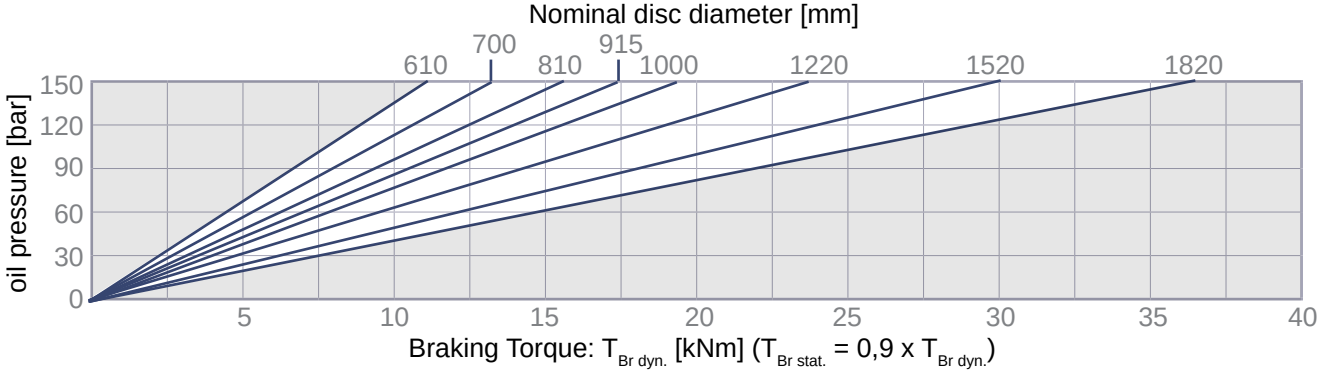

Brake Type R&H 350.20X.01

hydraulically applied

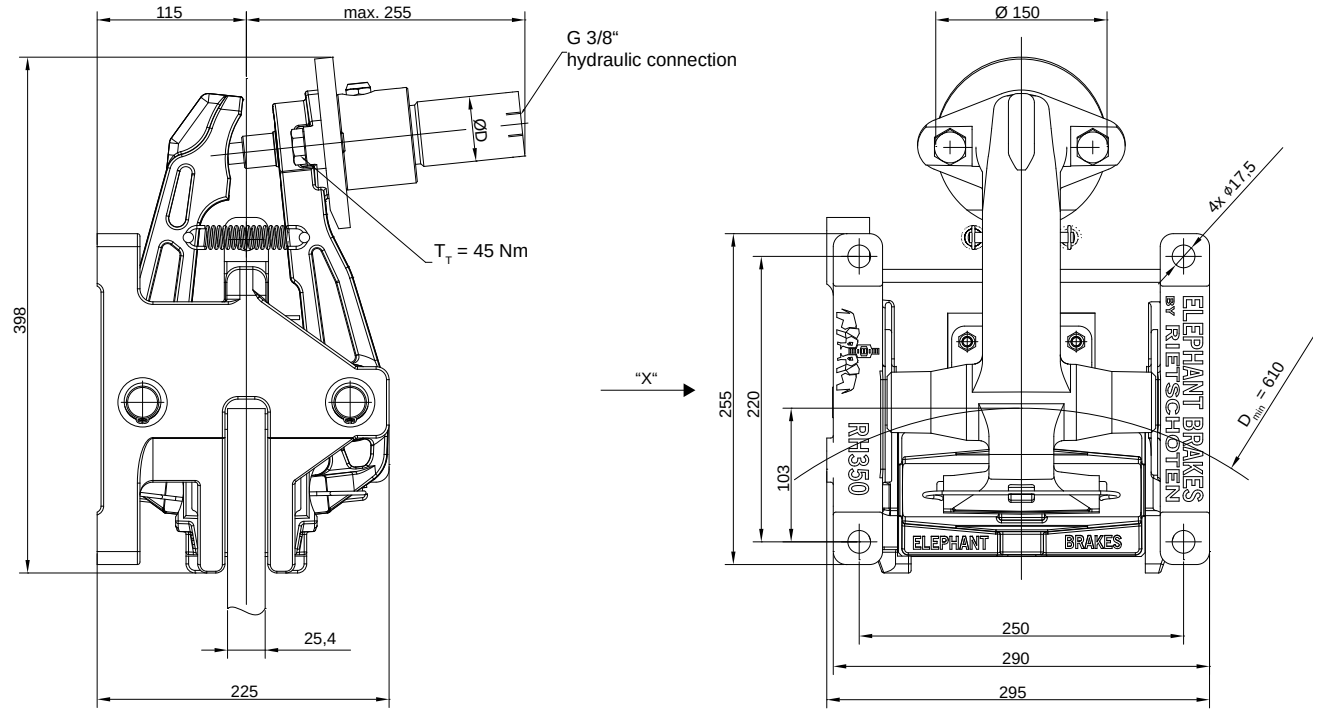

view „X“
mounting surface

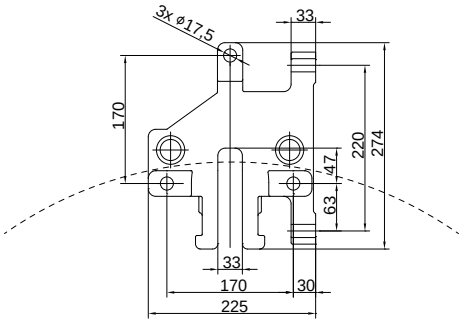

Mounting position is horizontal. Please get in touch if different.

A right hand mounted thruster is standard – left hand mounted please state with order.

Type	*Part-No.*	D [mm]	p_{max}	max. V / stroke [cm³]	Mass [kg]
R&H 350.204.01	***11228***	50	150	90	48
R&H 350.205.01	***10451***	60	100	140	

For use with mineral oil.

Brake Type EB 108 / EB 115

hydraulically applied

NOTE:
Also pneumatically applied usable.
See page 60

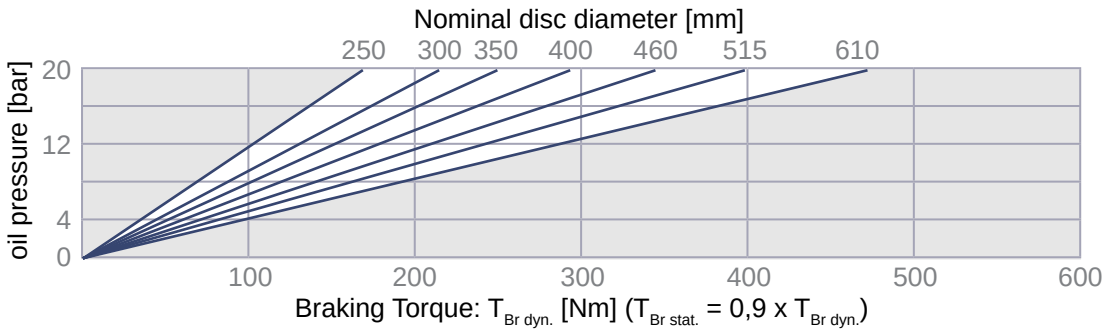

p_{max}: 20 bar
pneumatically applied $p_{max.}$: 8 bar

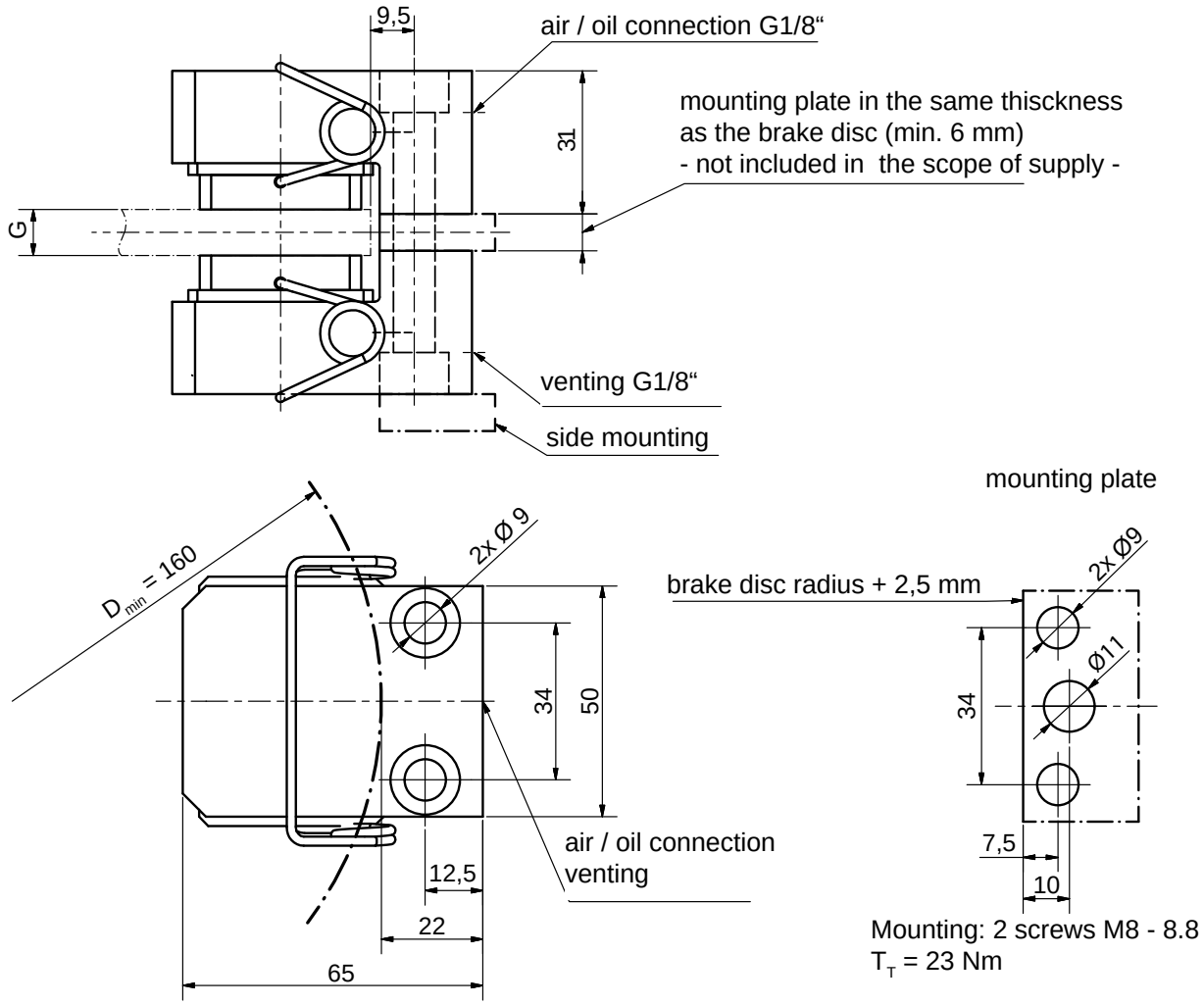

For G = 8 mm: EB 108, ***Part-No. 12294***

For G = 15 mm: EB 115, ***Part-No. 10811***

Further disc thicknesses and mounting plates for side mounting on request

For use with mineral oil.

Brake Type EB 255

hydraulically applied

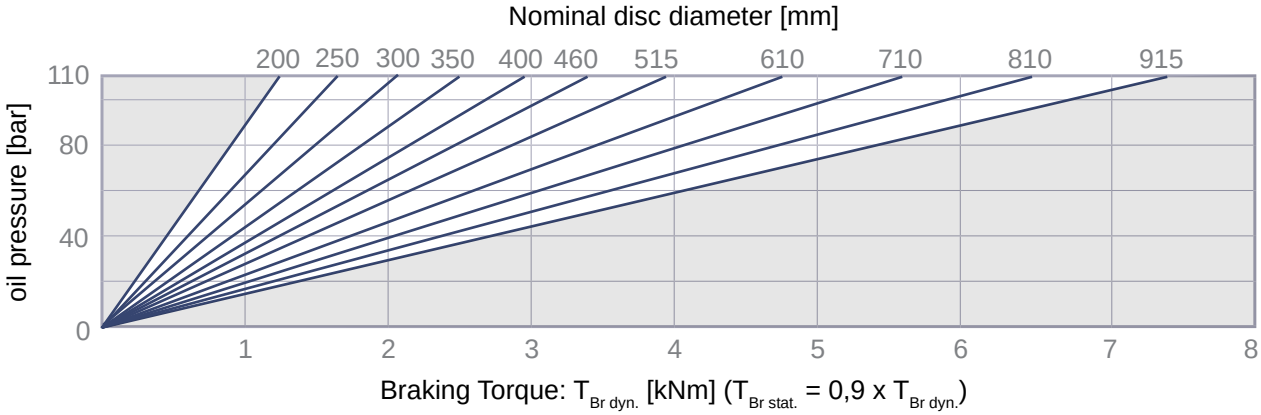

$p_{max.}$: 110 bar

$-20°C \leq T_{amb} \leq 40°C$

Mass: 5,6 kg

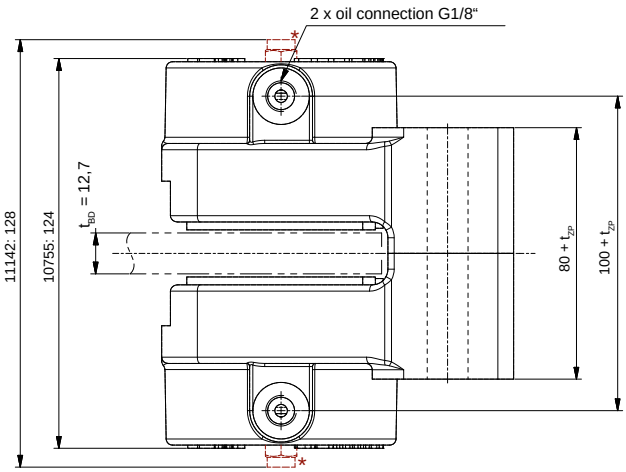

Mounting kit:
2 x cap screw ISO 4762 – M12 x (60 + t_{MP}) – 12.9
2 x screw – M12 x (100 + t_{MP}) – 12.9

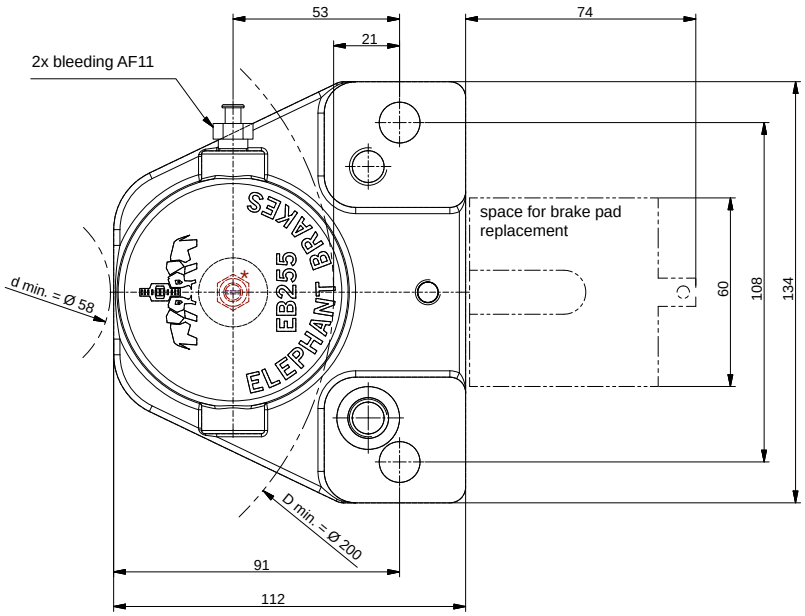

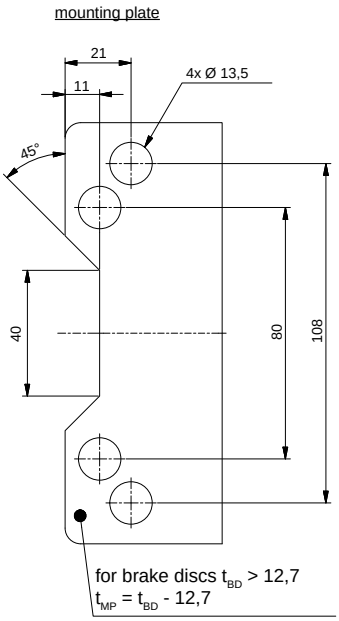

** active piston retraction*

For use with hydraulic oil HLP46 according to DIN 51524-2.
HFC and bio-degradable oils on request.

EB 255 – ***Part-No. 10755***
EB 255 with active piston retraction – ***Part-No. 11142***

Brake Type EB 285

hydraulically applied

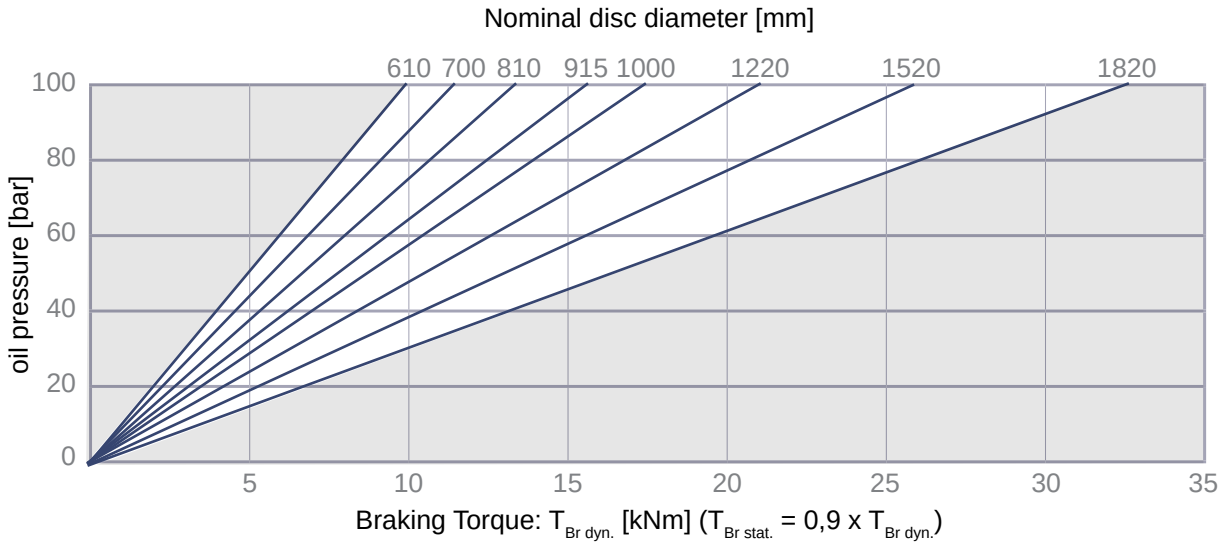

max. oil demand per braking: 0,1 l

brake pad surface: 142 cm²

p_{max}: 100 bar

Mass: 24,5 kg

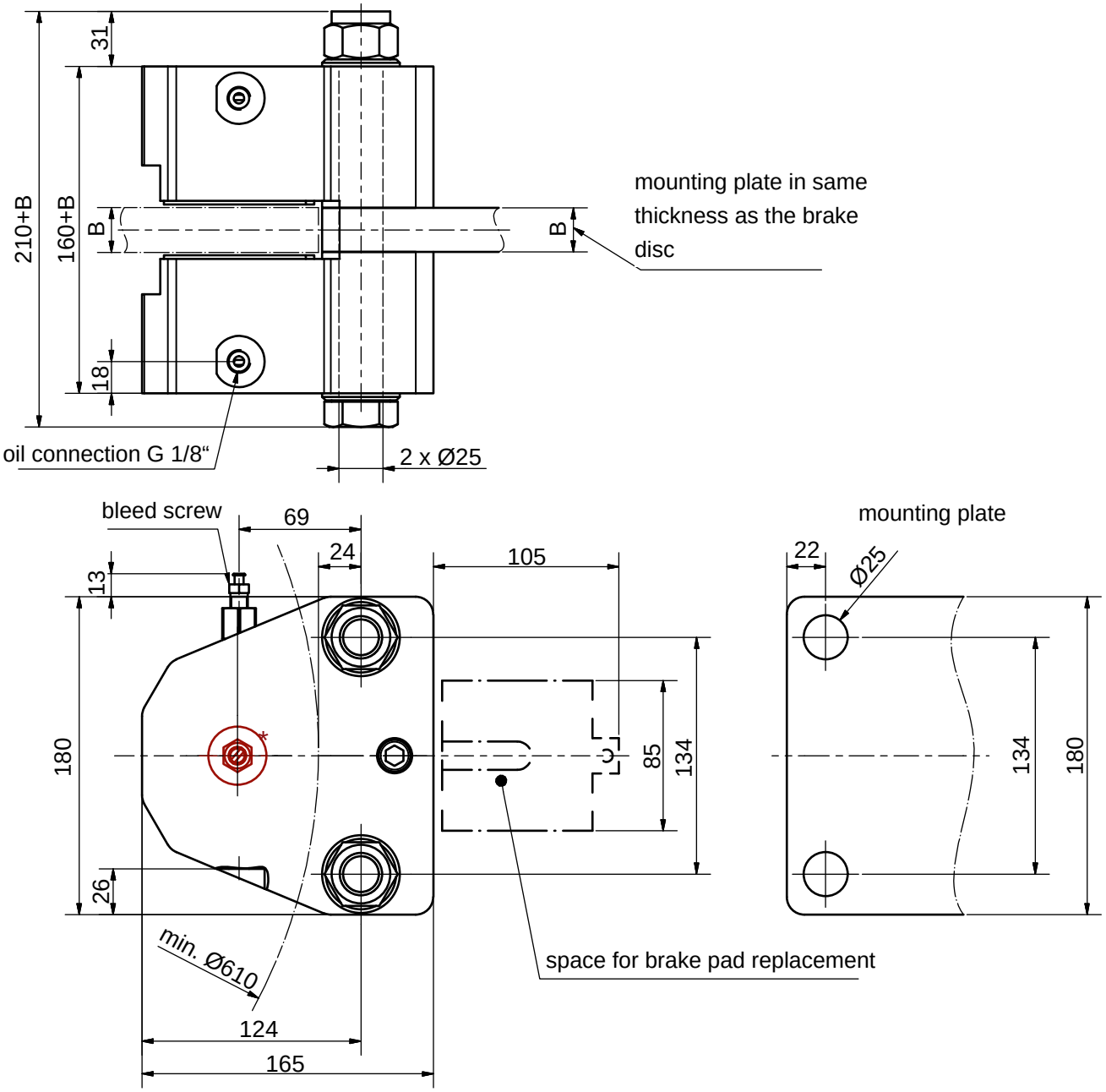

** active piston retraction*

EB 285 – ***Part-No. 10926***

EB 285 w/ active piston retraction – ***Part-No. 11244***

For use with mineral oil.

Brake Type EB 500

hydraulically applied

Part-No.: 11585

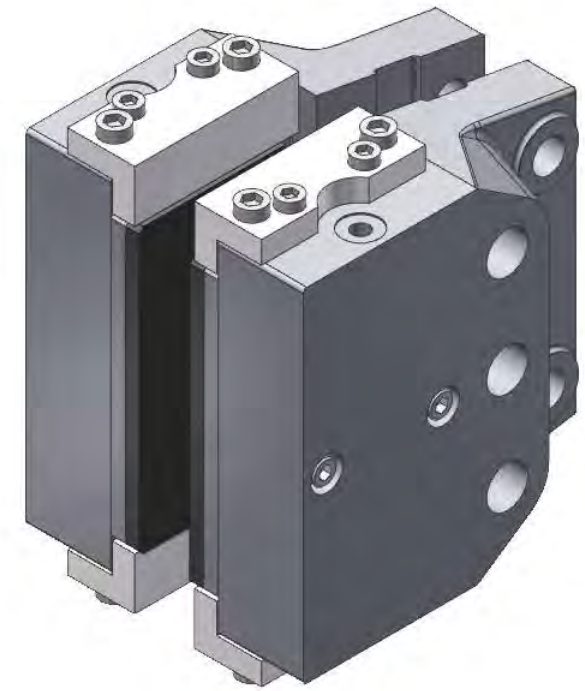

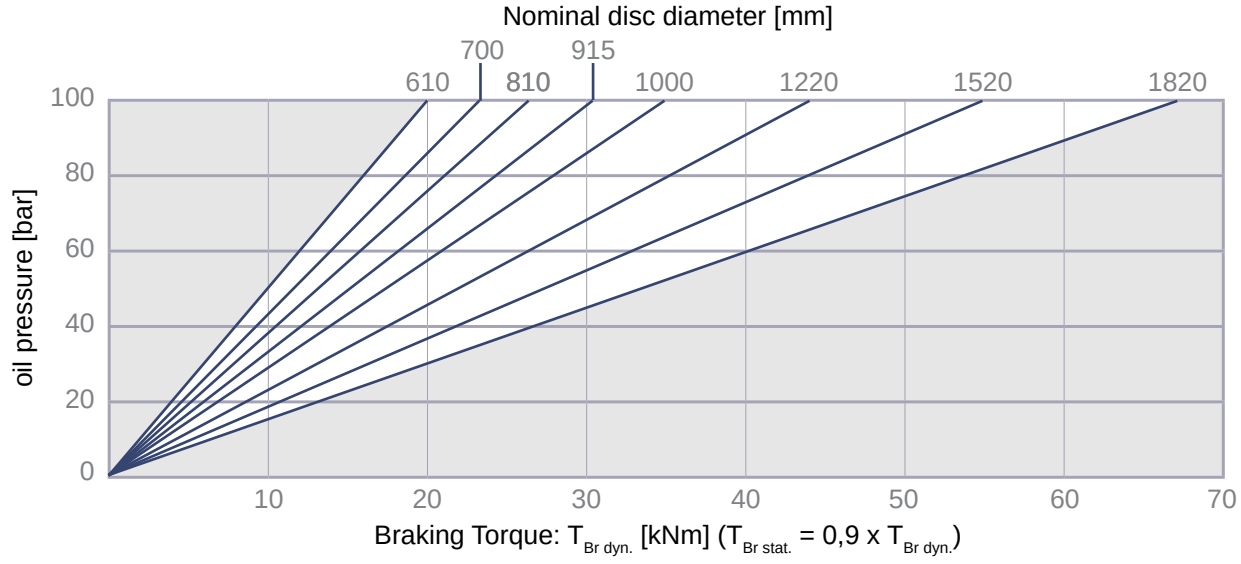

max. oil demand per switching cycle: 200 cm³

brake pad surface: 408 cm²

$p_{max.}$: 150 bar (100 bar for side mounting)

Mass: 48 kg

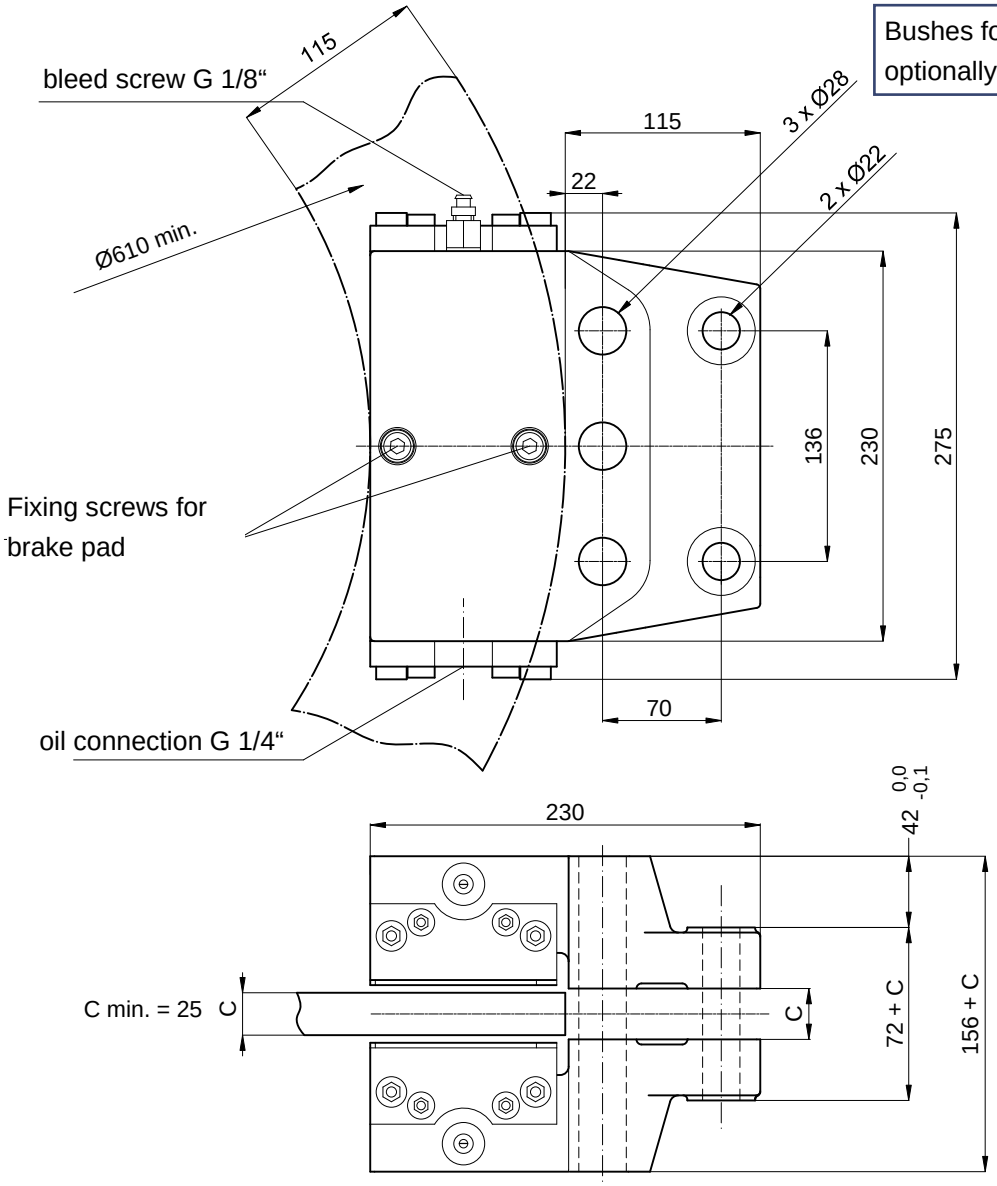

Bushes for side mounting available optionally – ***Part-No.: 13367***

Fixing screws:
3 x M27 - 10.9;
2 x M20 - 10.9;
with hardened washers according to DIN 6916

For use with mineral oil.

Brake Type EB 600

hydraulically applied

NOTE:
Available soon!

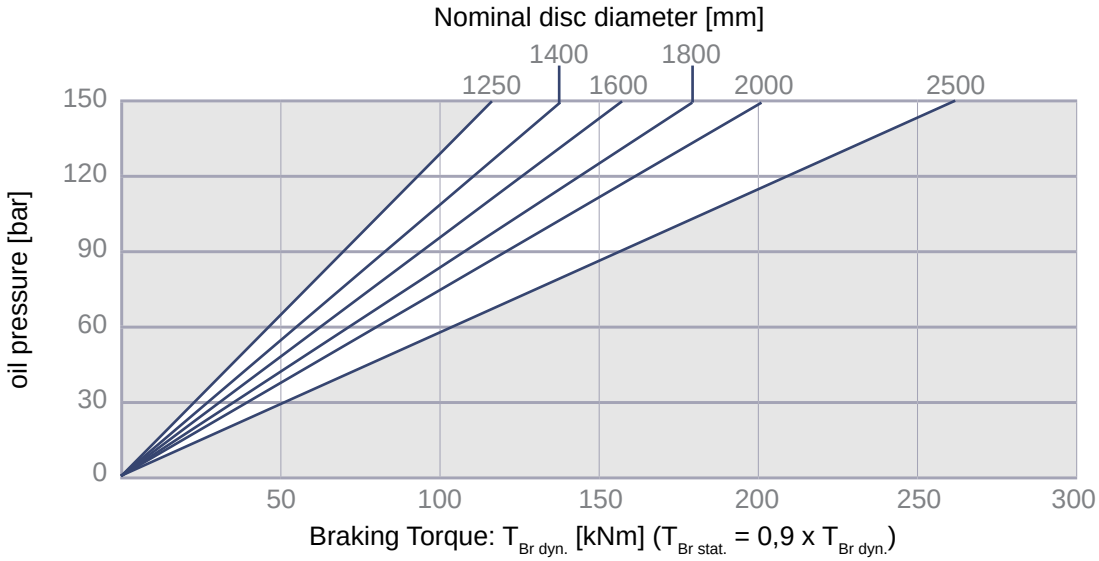

Oil demand at 2 mm stroke: 46 cm³ per caliper half

Brake pad surface: 583 cm² per caliper half

$p_{max.}$: 150 bar

Mass: 234 kg

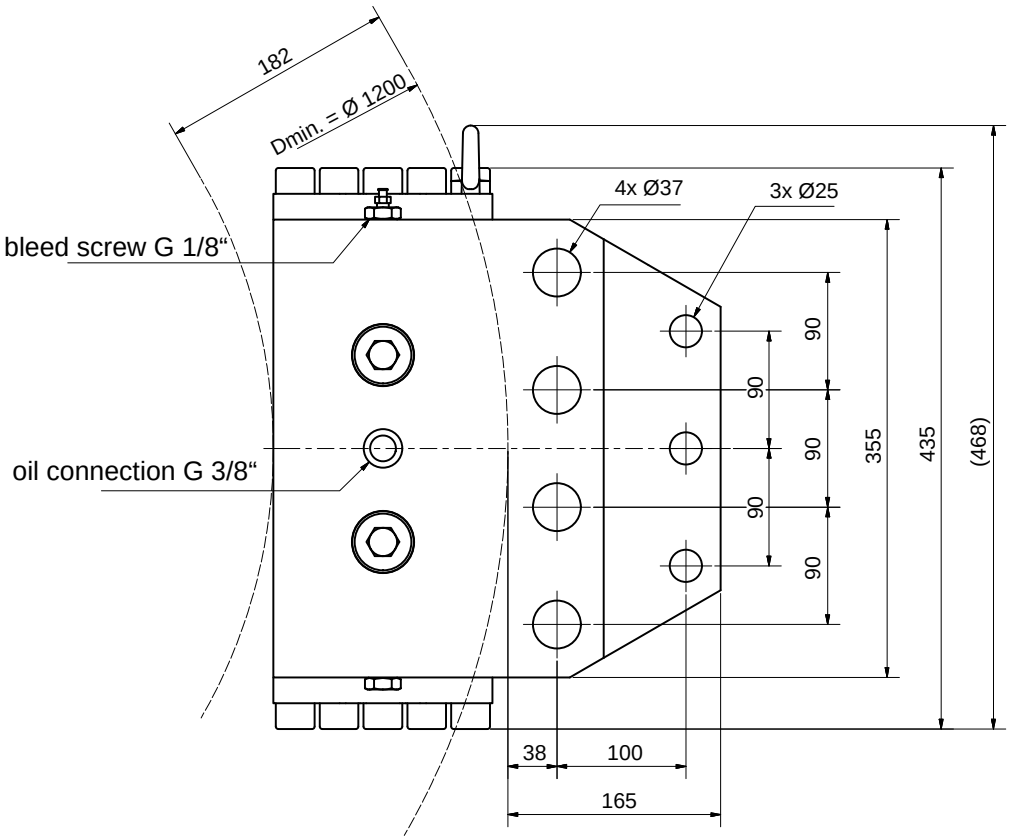

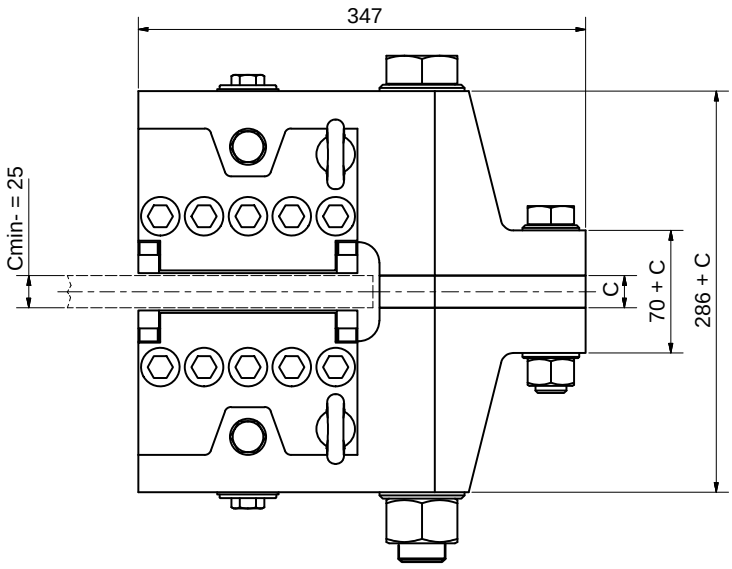

Fixing screws:
4 x M36 - 8.8;
3 x M24 - 8.8;
with hardened washers
according to DIN 6916

For use with mineral oil.

NOTE:
Optionally, an automatic pad wear adjustment is available. Please get in touch with us.

spring-applied, pneumatically released brakes

ELEPHANT BRAKES BY RIETSCHOTEN

Brake Type R&H 050.402.01

spring-applied, pneumatically released

Part-No.: 12244

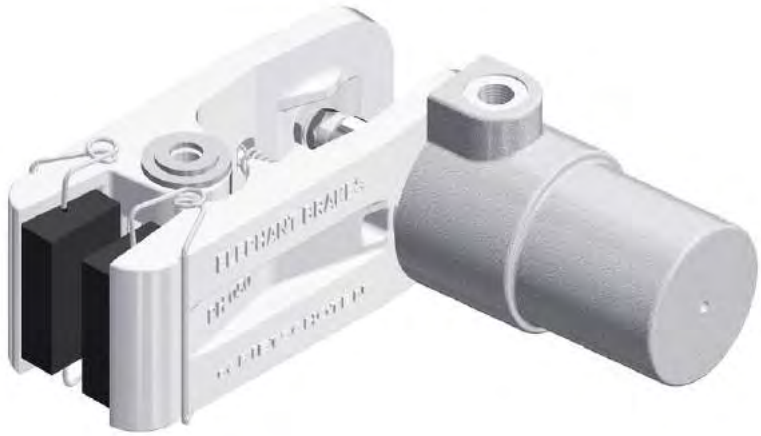

Nominal disc diameter [mm]					
150	200	250	300	400	460
Braking Torque: $T_{Br\ dyn.}$ [Nm] ($T_{Br\ stat.}$ = 0,9 x $T_{Br\ dyn.}$)					
60	80	110	130	180	210

p_{min}: 5 bar
p_{max}: 8 bar
V / stroke: 0,015 dm³
Mass: 1,7 kg

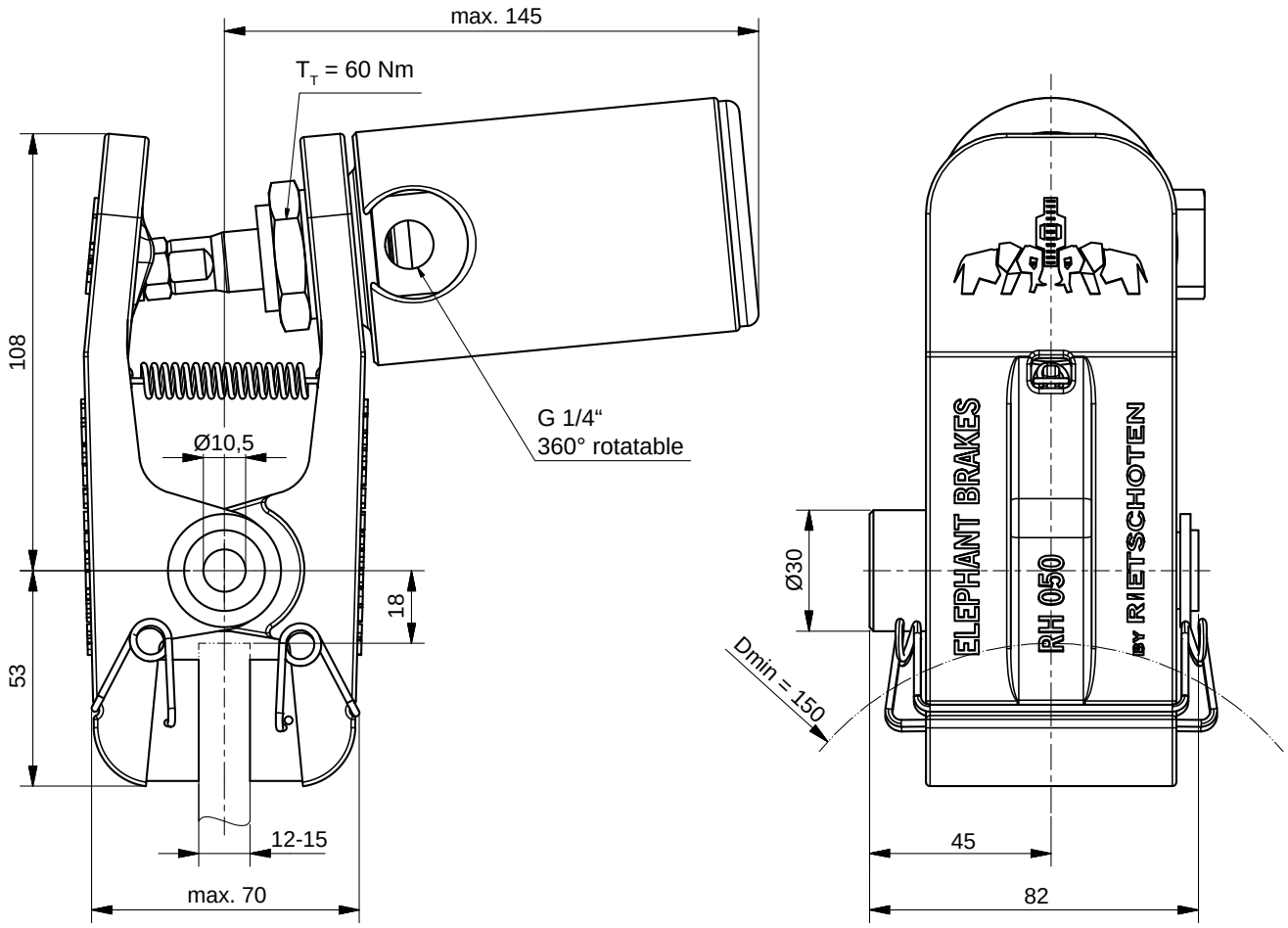

Mounting position is horizontal. Please get in touch if different.

A right hand mounted thruster is standard – left hand mounted please state with order.

Brake Type R&H 100.40X.01

spring-applied, pneumatically released

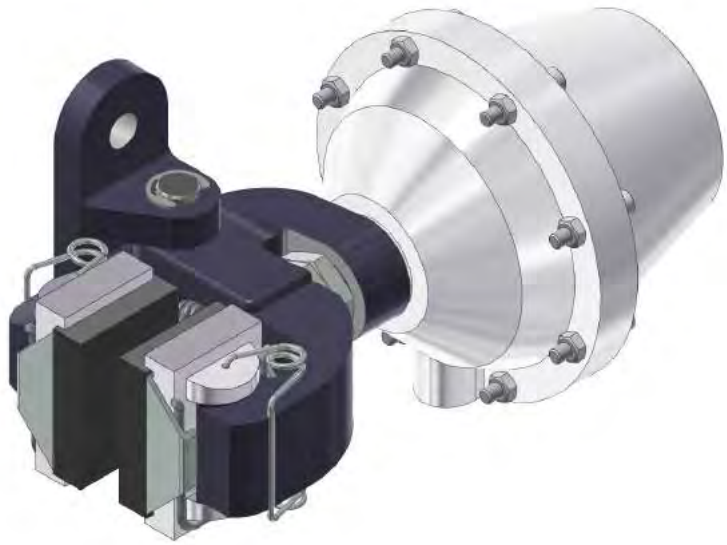

R&H 100.405.01

spring force	Nominal disc diameter [mm]										
	200	250	300	350	400	460	515	610	710	810	915
	Braking Torque: $T_{Br\ dyn.}$ [Nm] ($T_{Br\ stat.}$ = 0,9 x $T_{Br\ dyn.}$)										
100%	90	130	160	190	220	260	290	350	410	470	540
66%	60	80	105	125	145	170	190	230	270	310	355
33%	30	40	50	60	70	85	95	115	135	155	180

R&H 100.406.01

spring force	Nominal disc diameter [mm]										
	200	250	300	350	400	460	515	610	710	810	915
	Braking Torque: $T_{Br\ dyn.}$ [Nm] ($T_{Br\ stat.}$ = 0,9 x $T_{Br\ dyn.}$)										
100%	160	220	270	325	380	445	505	610	715	825	940
66%	105	145	180	215	250	295	335	400	470	545	620
33%	50	70	90	110	125	145	165	200	235	270	310

p_{min}: 5 bar (100%) / 3,3 bar (66%) / 1,7 bar (33%)
p_{max}: 10 bar

Brake Type R&H 100.40X.01

spring-applied, pneumatically released

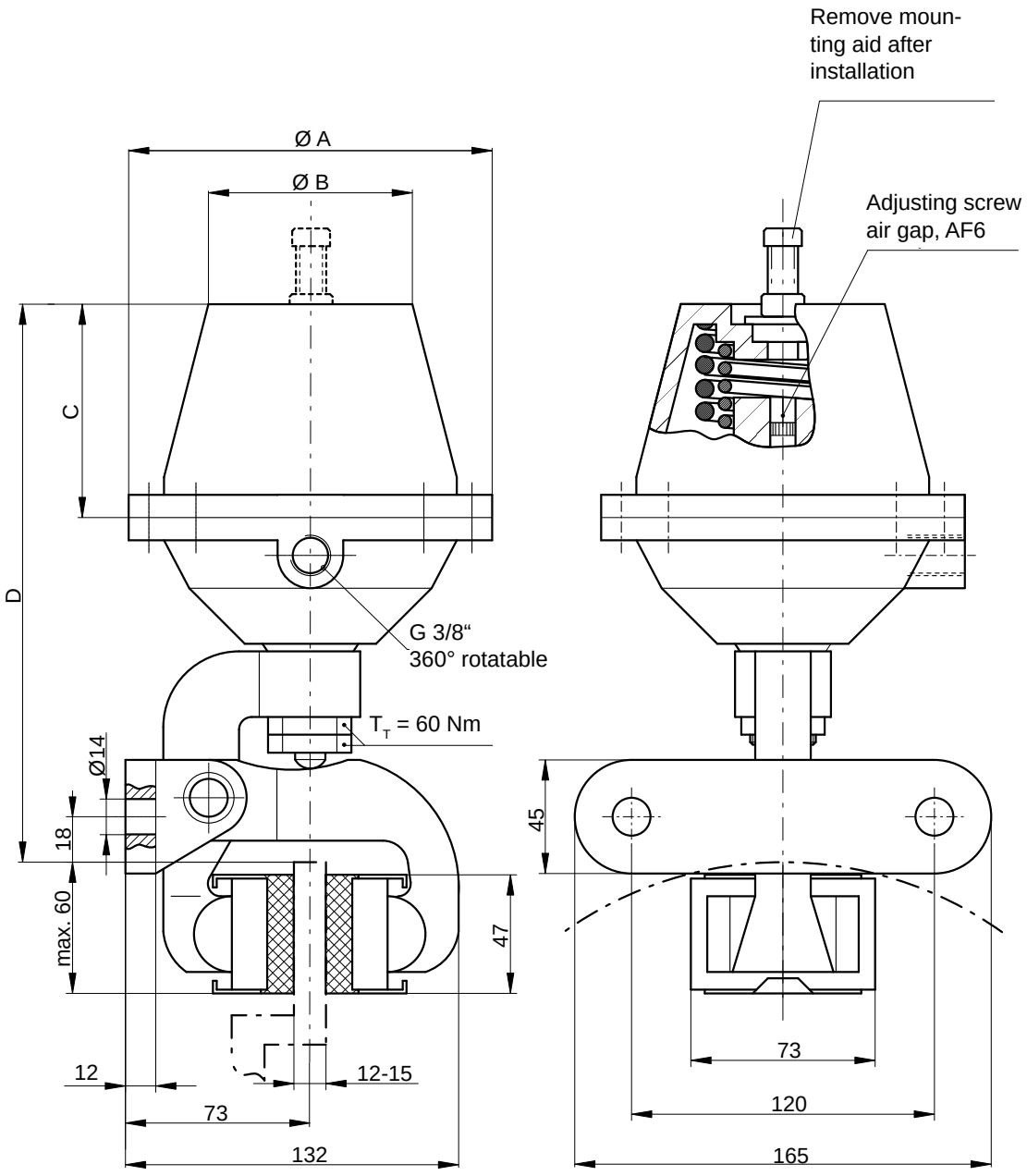

Mounting position is horizontal. Please get in touch if different.

Type	Part-No.	Ø A [mm]	Ø B [mm]	C [mm]	$D_{max.}$ [mm]	Mass [kg]	V / stroke [dm³]
R&H 100.405.01	***11847***	144	81	82,5	225	6,2	0,12
R&H 100.405.01 66%	***13199***						
R&H 100.405.01 33%	***13200***						
R&H 100.406.01	***11848***	180	110	97,5	245	7,7	0,43
R&H 100.406.01 66%	***13201***						
R&H 100.406.01 33%	***13202***						

Brake Type R&H 200.40X.01

spring-applied, pneumatically released

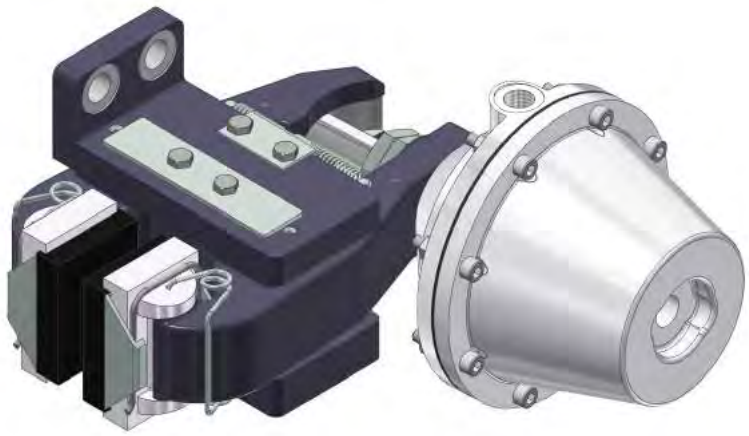

R&H 200.405.01

spring force	Nominal disc diameter [mm]										
	200	250	300	350	400	460	515	610	710	810	915
	Braking Torque: $T_{Br\ dyn.}$ [Nm] ($T_{Br\ stat.}$ = 0,9 x $T_{Br\ dyn.}$)										
100%	235	315	390	470	550	645	730	880	1040	1195	1350
66%	155	210	260	310	365	425	480	580	685	790	890
33%	80	105	130	155	180	210	240	290	345	395	445

R&H 200.406.01

spring force	Nominal disc diameter [mm]										
	200	250	300	350	400	460	515	610	710	810	915
	Braking Torque: $T_{Br\ dyn.}$ [Nm] ($T_{Br\ stat.}$ = 0,9 x $T_{Br\ dyn.}$)										
100%	415	555	685	825	970	1135	1285	1550	1830	2100	2390
66%	275	365	450	545	640	750	850	1025	1210	1385	1575
33%	135	185	225	270	320	375	425	510	605	695	790

p_{min}: 5 bar (100%) / 3,3 bar (66%) / 1,7 bar (33%)
p_{max}: 10 bar

Brake Type R&H 200.40X.01

spring-applied, pneumatically released

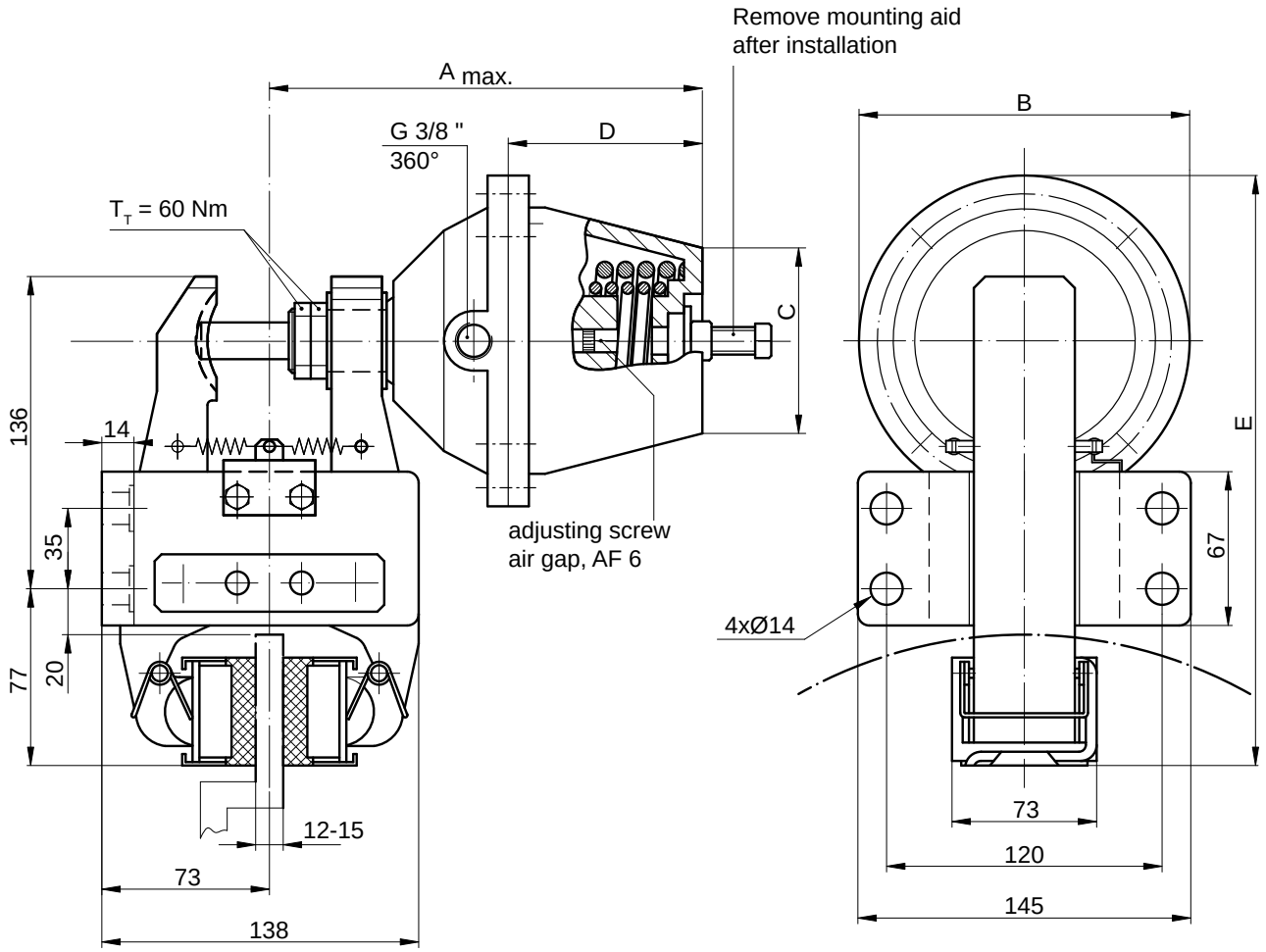

Mounting position is horizontal. Please get in touch if different.

A right hand mounted actuator is standard – „flange side“ mounted please state with order.

Type	*Part-No.*	A max. [mm]	Ø B [mm]	Ø C [mm]	D [mm]	E [mm]	V / stroke [dm³]	Mass [kg]
R&H 200.405.01	***11849***	200	144	81	82,5	260	0,12	10,4
R&H 200.405.01 66%	***13212***							
R&H 200.405.01 33%	***13213***							
R&H 200.406.01	***11850***	230	180	110	97,5	278	0,43	11,9
R&H 200.406.01 66%	***13224***							
R&H 200.406.01 33%	***13225***							

Brake Type R&H 200.412.01

spring-applied, pneumatically released

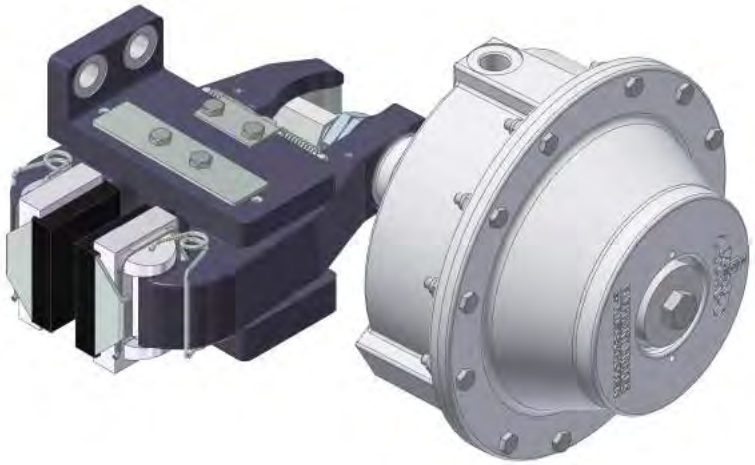

		Nominal disc diameter [mm]										
		200	250	300	350	400	460	515	610	710	810	915
Type	***Part-No.***	**Braking Torque: $T_{Br\ dyn.}$ [Nm] ($T_{Br\ stat.}$ = 0,9 x $T_{Br\ dyn.}$)**										
R&H 200.412.01	***14569***	660	910	1160	1410	1660	1960	2230	2700	3200	3690	4220
R&H 200.412.01 66%	***14569-66***	440	600	770	930	1090	1290	1470	1780	2110	2440	2780
R&H 200.412.01 33%	***14569-33***	220	300	380	470	550	650	740	890	1060	1220	1390

p_{min}: 5 bar (100%) / 3,3 bar (66%) / 1,7 bar (33%)
p_{max}: 10 bar
V / stroke: 0,4 dm³
Mass: 15 kg

Brake Type R&H 200.412.01

spring-applied, pneumatically released

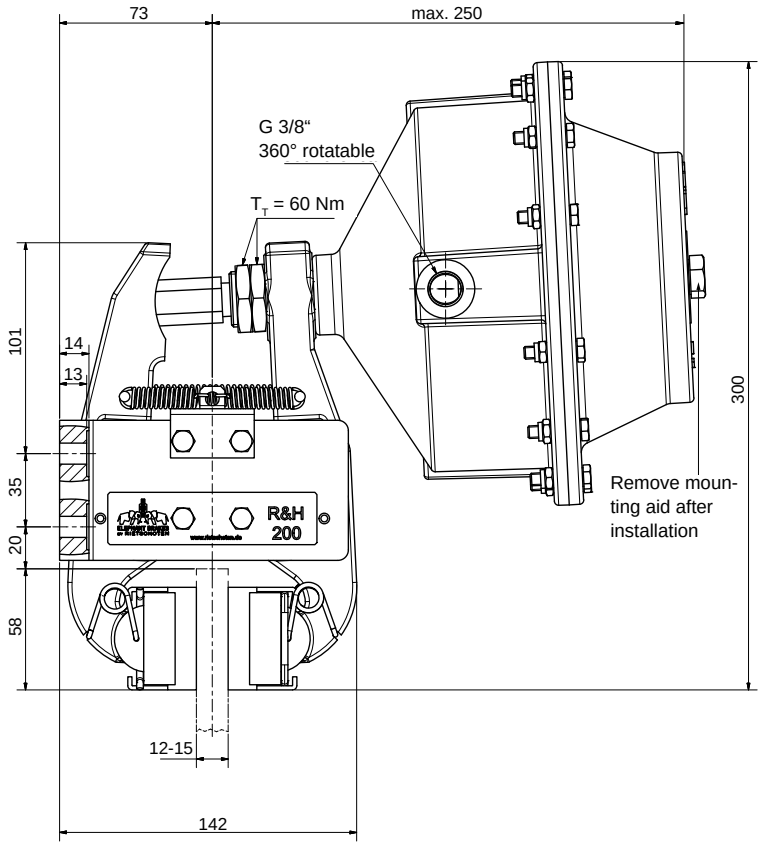

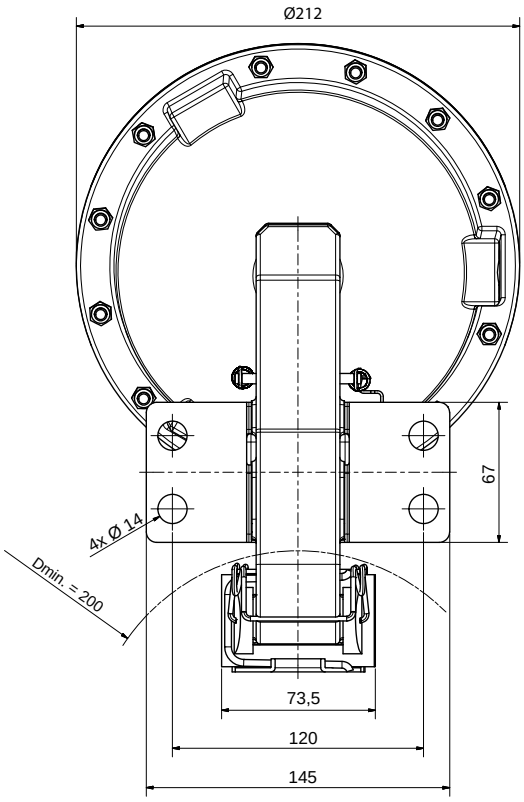

Mounting position is horizontal. Please get in touch if different.

A right hand mounted actuator is standard – „flange side“ mounted please state with order.

ELEPHANT BRAKES BY RIETSCHOTEN

Brake Type R&H 200.420.01

spring-applied, pneumatically released

Part-No.: 12792

NOTE:
Also pneumatically applied usable

spring-applied, pneumatically released

Nominal disc diameter [mm]										
200	250	300	350	400	460	515	610	710	810	915
Braking Torque: $T_{Br\ dyn.}$ [Nm] ($T_{Br\ stat.}$ = 0,9 x $T_{Br\ dyn.}$)										
550	775	925	1050	1250	1400	1650	2000	2300	2600	3000

p_{min}: 5 bar
p_{max}: 10 bar
V / stroke: 0,22 dm³
Mass: 16,5 kg

pneumatically applied

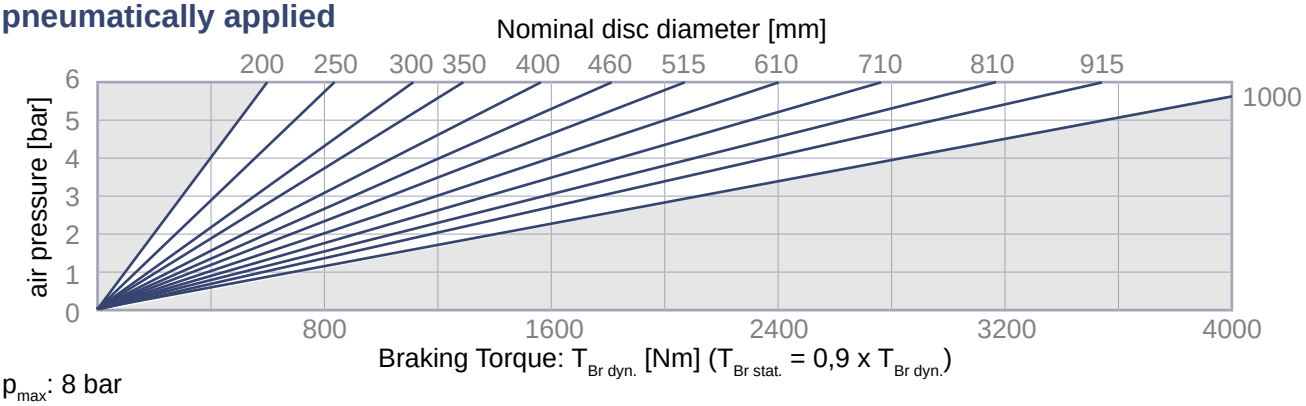

p_{max}: 8 bar

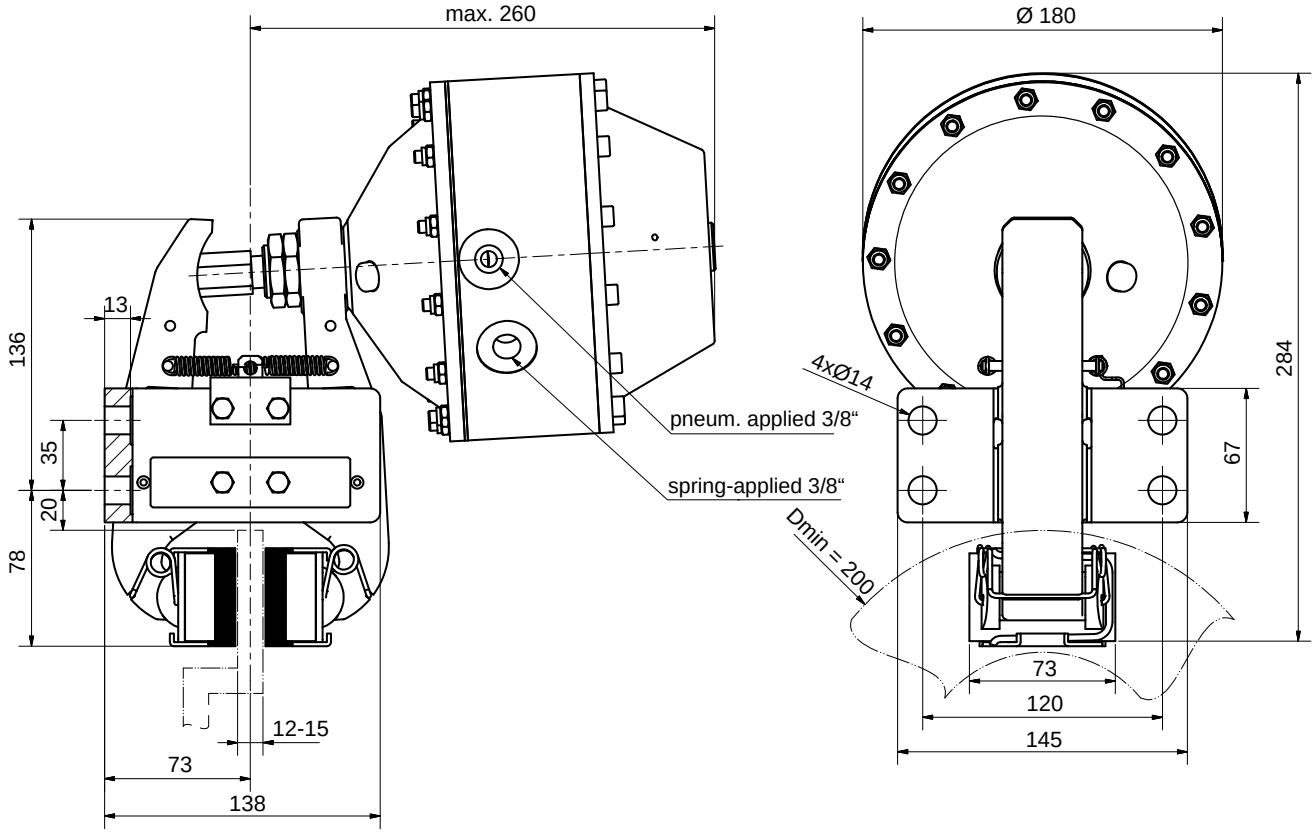

Mounting position is horizontal. Please get in touch if different.

A right hand mounted actuator is standard – „flange side“ mounted please state with order.

Brake Type R&H 2XX.40X.01

spring-applied, pneumatically released

NOTE:
Optionally, an automatic pad wear adjustment is available. Please get in touch with us.

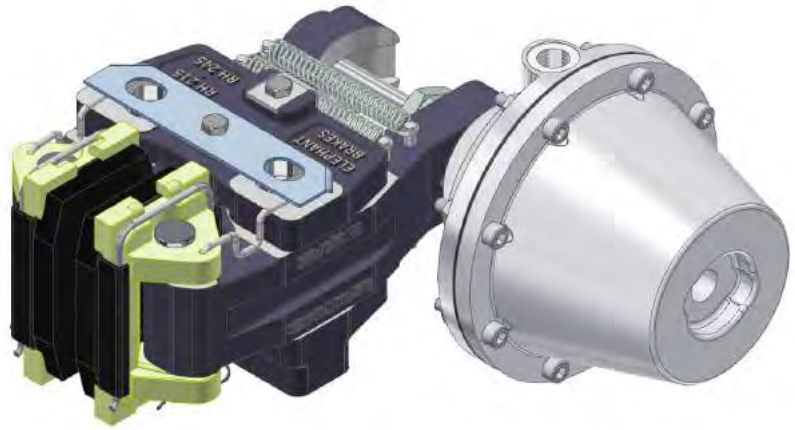

R&H 215.405.01 / R&H 225.405.01 / R&H 230.405.01

spring force	Nominal disc diameter [mm]										
	200	250	300	350	400	460	515	610	710	810	915
	Braking Torque: $T_{Br\ dyn.}$ [Nm] ($T_{Br\ stat.}$ = 0,9 x $T_{Br\ dyn.}$)										
100%	235	315	390	470	550	645	730	880	1040	1195	1350
66%	155	210	260	310	365	425	480	580	685	790	890
33%	80	105	130	155	180	210	240	290	345	395	445

R&H 215.406.01 / R&H 225.406.01 / R&H 230.406.01 / R&H 245.406.01

spring force	Nominal disc diameter [mm]										
	200	250	300	350	400	460	515	610	710	810	915
	Braking Torque: $T_{Br\ dyn.}$ [Nm] ($T_{Br\ stat.}$ = 0,9 x $T_{Br\ dyn.}$)										
100%	415	555	685	825	970	1135	1285	1550	1830	2100	2390
66%	275	365	450	545	640	750	850	1025	1210	1385	1575
33%	135	185	225	270	320	375	425	510	605	695	790

$p_{min.}$: 5 bar (100%) / 3,3 bar (66%) / 1,7 bar (33%)
$p_{max.}$: 10 bar

Brake Type R&H 2XX.40X.01

spring-applied, pneumatically released

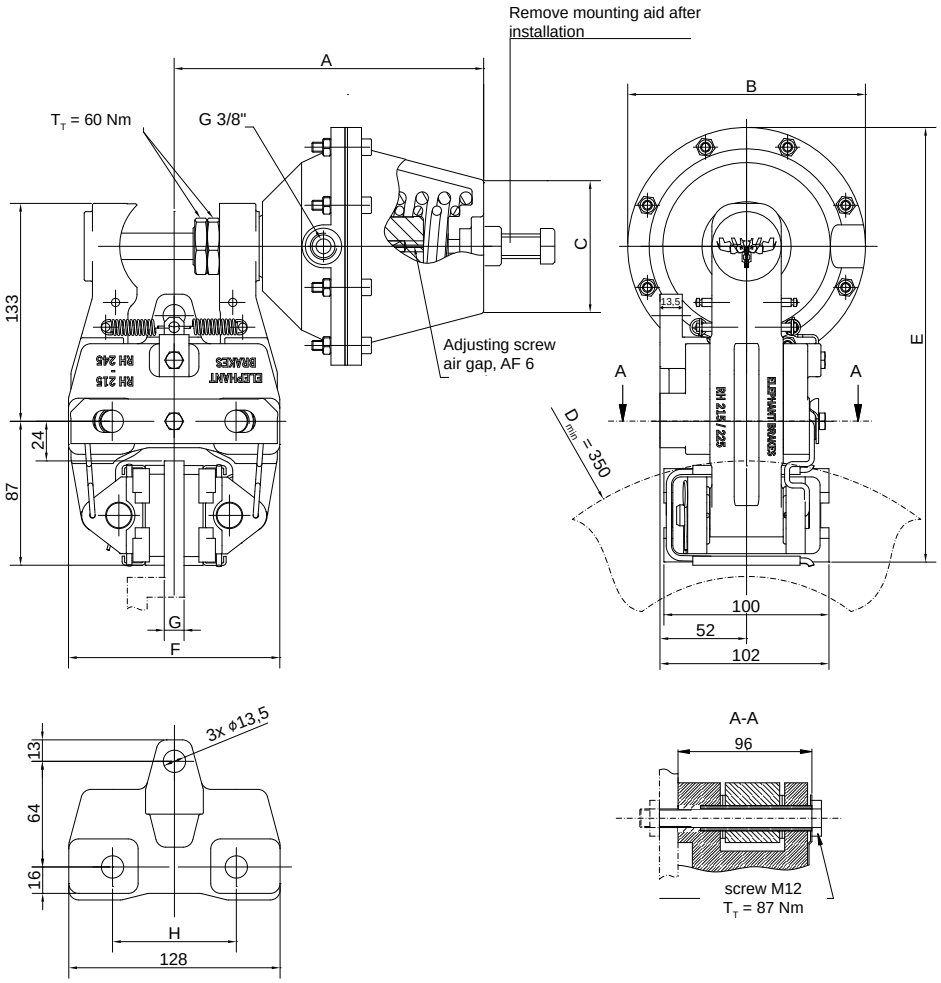

Mounting position is horizontal. Please get in touch if different.

A right hand mounted thruster is standard – left hand mounted please state with order.

Type	Part-No.	A max. [mm]	Ø B [mm]	Ø C [mm]	E [mm]	F [mm]	G [mm]	H [mm]	V / stroke [dm³]	Mass [kg]
R&H 215.405.01 100%	*11860*	200	144	81	265	130	12-15	75	0,12	10,3
R&H 215.405.01 66%	*13216*									
R&H 215.405.01 33%	*13217*									
R&H 225.405.01 100%	*11861*	205				140	25,4	84		
R&H 225.405.01 66%	*13218*									
R&H 225.405.01 33%	*13219*									
R&H 230.405.01 100%	*11862*	200				144	30	75		10,5
R&H 230.405.01 66%	*13220*									
R&H 230.405.01 33%	*13221*									
R&H 215.406.01 100%	*11863*	230	180	110	281	130	12-15	75	0,43	12
R&H 215.406.01 66%	*13230*									
R&H 215.406.01 33%	*13231*									
R&H 225.406.01 100%	*11864*	235				140	25,4	84		
R&H 225.406.01 66%	*13232*									
R&H 225.406.01 33%	*13233*									
R&H 230.406.01 100%	*11865*	230				144	30	75		12,2
R&H 230.406.01 66%	*13234*									
R&H 230.406.01 33%	*13235*									
R&H 245.406.01 100%	*13925*	235				154	45	84		

Brake Type R&H 2XX.412.01

spring-applied, pneumatically released

NOTE:
Optionally, an automatic pad wear adjustment is available. Please get in touch with us.

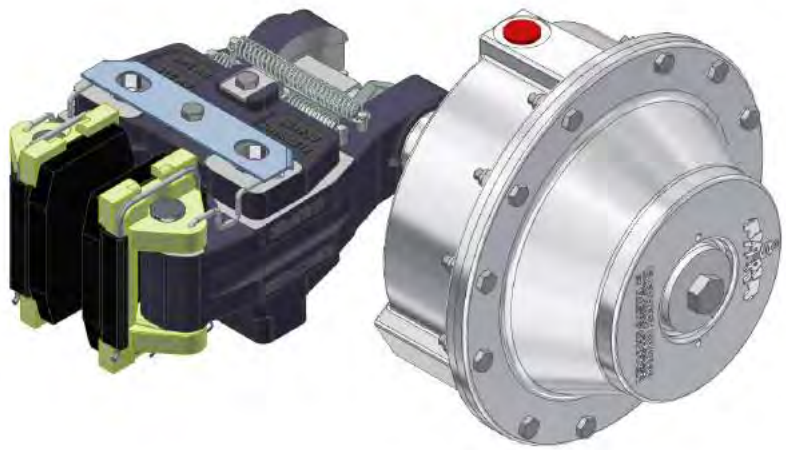

spring force	Nominal disc diameter [mm]							
	350	400	460	515	610	710	810	915
	Braking Torque: $T_{Br\ dyn.}$ [Nm] ($T_{Br\ stat.}$ = 0,9 x $T_{Br\ dyn.}$)							
100%	1410	1660	1960	2230	2700	3200	3700	4220
66%	930	1100	1290	1470	1780	2110	2440	2780
33%	470	550	650	740	890	1060	1220	1390

Brake Type R&H 2XX.412.01

spring-applied, pneumatically released

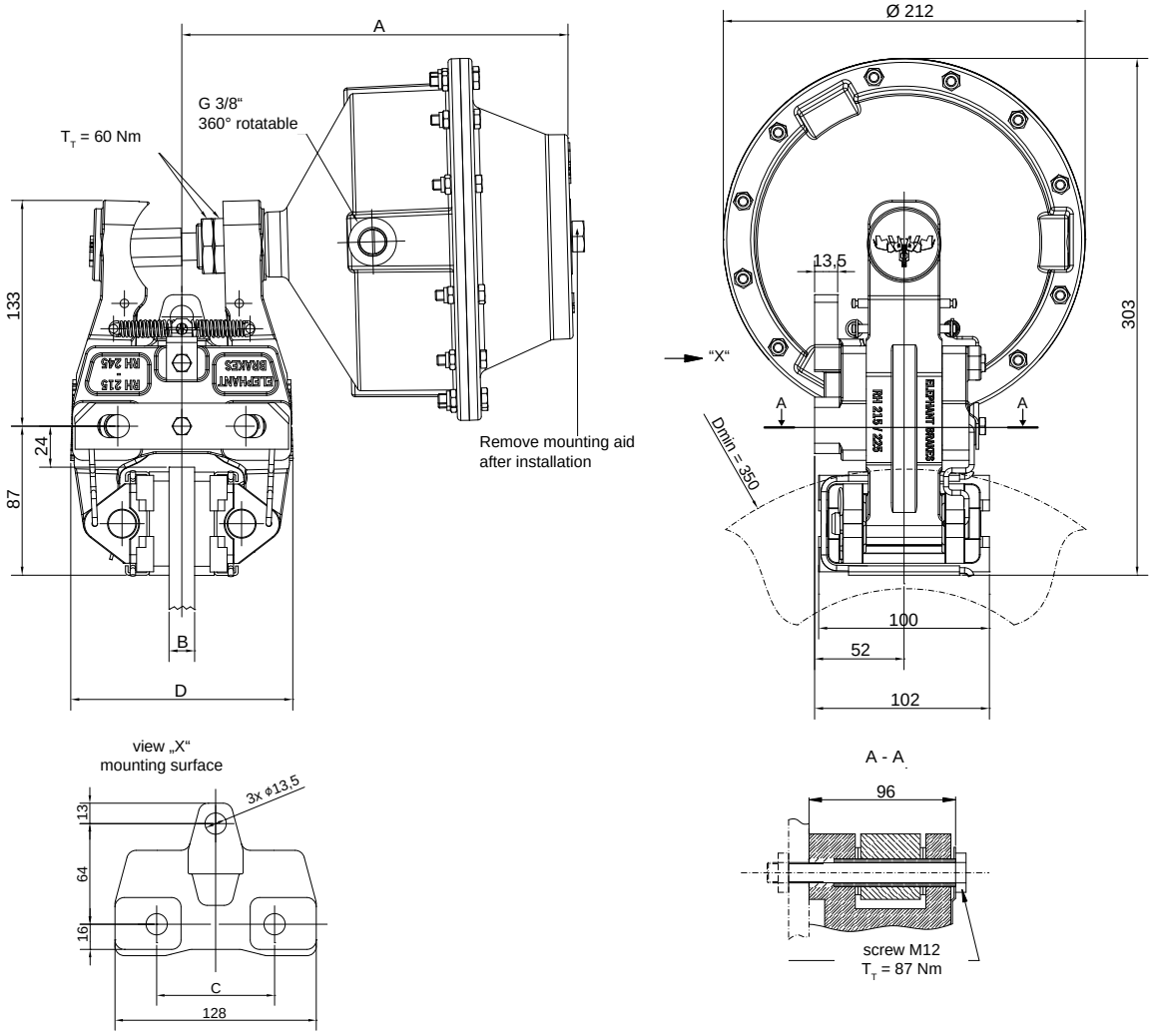

Mounting position is horizontal. Please get in touch if different.

A right hand mounted thruster is standard – left hand mounted please state with order.

Type*	Part-No.	A [mm]	B [mm]	C [mm]	D [mm]	p_{min} [bar]	p_{max} [bar]	V / stroke [dm³]	Mass [kg]
R&H 215.412.01	**14615**	225	12 - 15	75	130	5	10	0,4	14,2
R&H 215.412.01 66%	**14808**					3,3			
R&H 225.412.01	**14621**	230	25,4	84	140	5			
R&H 230.412.01	**14622**	233	30	75	144				14,4
R&H 245.412.01	**14623**	240	45	84	154				

** more spring forces available on request*

Brake Type R&H 250.40X.01

spring-applied, pneumatically released

NOTE:
Optionally, an automatic pad wear adjustment is available. Please get in touch with us.

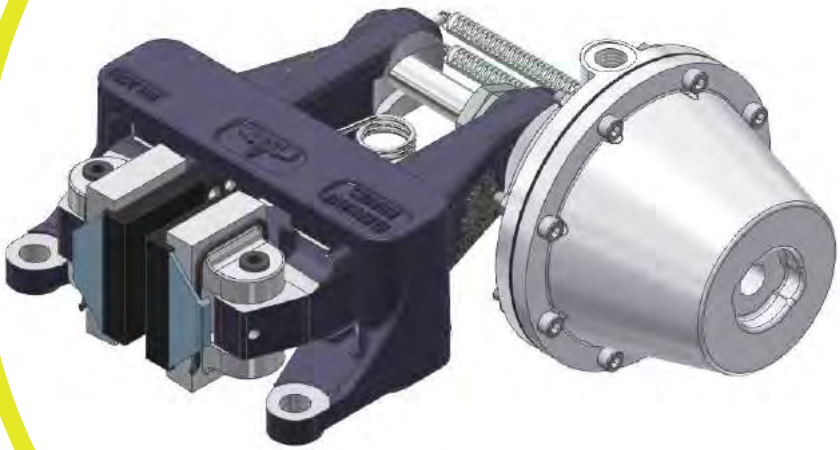

R&H 250.405.01

spring force	Nominal disc diameter [mm]										
	200	250	300	350	400	460	515	610	710	810	915
	Braking Torque: $T_{Br\ dyn.}$ [Nm] ($T_{Br\ stat.}$ = 0,9 x $T_{Br\ dyn.}$)										
100%	235	315	390	470	550	645	730	880	1040	1195	1350
66%	155	210	260	310	365	425	480	580	685	790	890
33%	80	105	130	155	180	210	240	290	345	395	445

R&H 250.406.01

spring force	Nominal disc diameter [mm]										
	200	250	300	350	400	460	515	610	710	810	915
	Braking Torque: $T_{Br\ dyn.}$ [Nm] ($T_{Br\ stat.}$ = 0,9 x $T_{Br\ dyn.}$)										
100%	415	555	685	825	970	1135	1285	1550	1830	2100	2390
66%	275	365	450	545	640	750	850	1025	1210	1385	1575
33%	135	185	225	270	320	375	425	510	605	695	790

$p_{min.}$: 5 bar (100%) / 3,3 bar (66%) / 1,7 bar (33%)
$p_{max.}$: 10 bar

Brake Type R&H 250.40X.01

spring-applied, pneumatically released

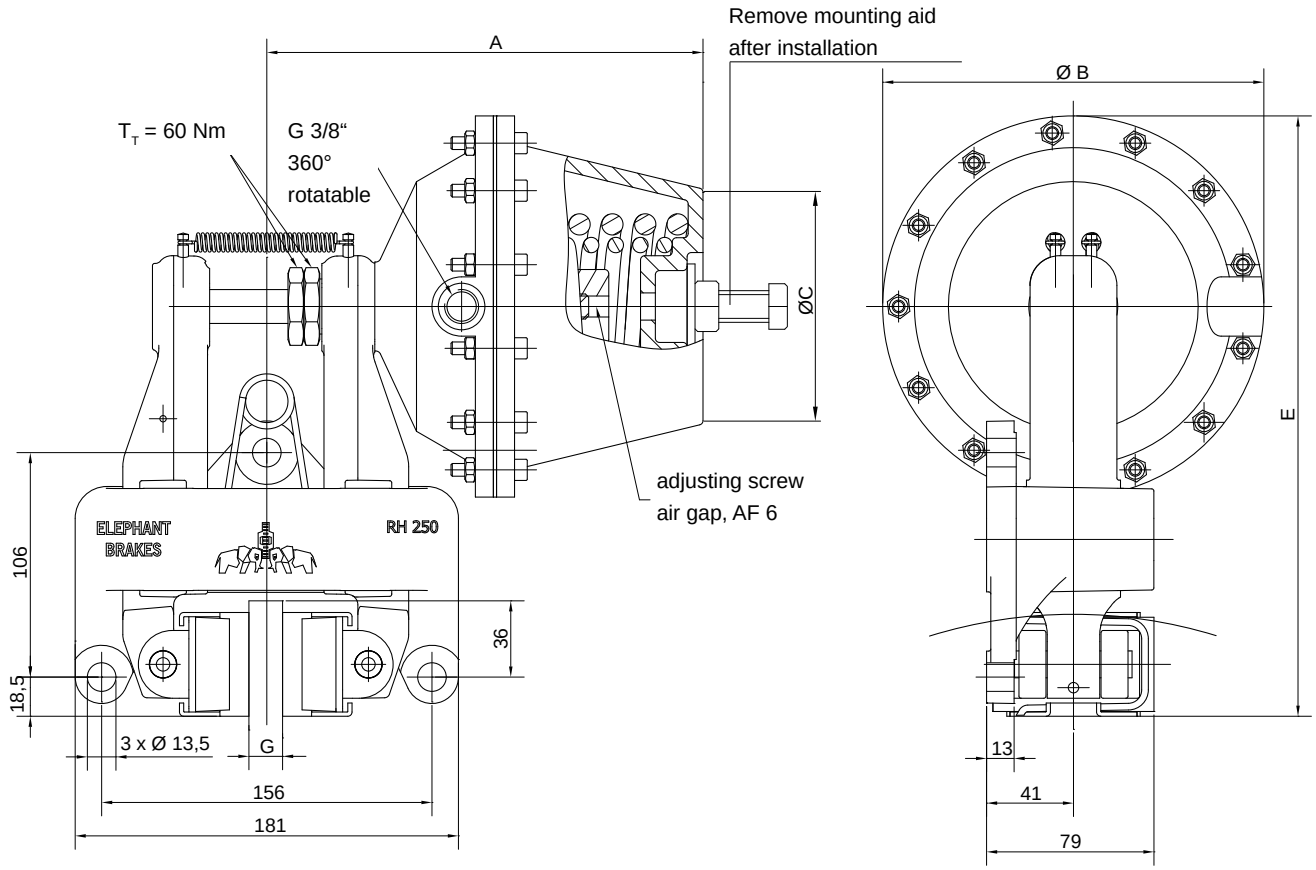

Mounting position is horizontal. Please get in touch if different.

A right hand mounted thruster is standard – left hand mounted please state with order.

Type	Part-No.	A max. [mm]	Ø B [mm]	Ø C [mm]	E [mm]	G [mm]	V/stroke [dm³]	Mass [kg]
R&H 250.405.01 100%	***11845***	205	144	81	266	12,7	0,12	9,5
R&H 250.405.01 66%	***13214***							
R&H 250.405.01 33%	***13215***							
R&H 250.406.01 100%	***11846***	230	180	110	284		0,43	11,0
R&H 250.406.01 66%	***13228***							
R&H 250.406.01 33%	***13229***							
R&H 250.405.01 short. 100%	***13209***	205	144	81	266	25,4	0,12	9,5
R&H 250.405.01 short. 66%	***13210***							
R&H 250.405.01 short. 33%	***13211***							
R&H 250.406.01 short. 100%	***12571***	230	180	110	284		0,43	11,0
R&H 250.406.01 short. 66%	***13222***							
R&H 250.406.01 short. 33%	***13223***							

ELEPHANT BRAKES BY RIETSCHOTEN

Brake Type R&H 250.412.01

spring-applied, pneumatically released

Part-No.: 14624

NOTE:
Optionally, an automatic pad wear adjustment is available. Please get in touch with us.

spring force	Nominal disc diameter [mm]										
	200	250	300	350	400	460	515	610	710	810	915
	Braking Torque: $T_{Br\ dyn.}$ [Nm] ($T_{Br\ stat.}$ = 0,9 x $T_{Br\ dyn.}$)										
100%	690	930	1170	1410	1660	1950	2220	2680	3160	3650	4160
66%	450	610	770	930	1090	1290	1460	1770	2090	2410	2740
33%	230	310	390	470	550	640	730	880	1040	1200	1370

$p_{min.}$: 5 bar (100%) / 3,3 (66%) / 1,7 (33%)
$p_{max.}$: 10 bar
max. V / stroke: 0,4 dm³
Mass: 13,9 kg

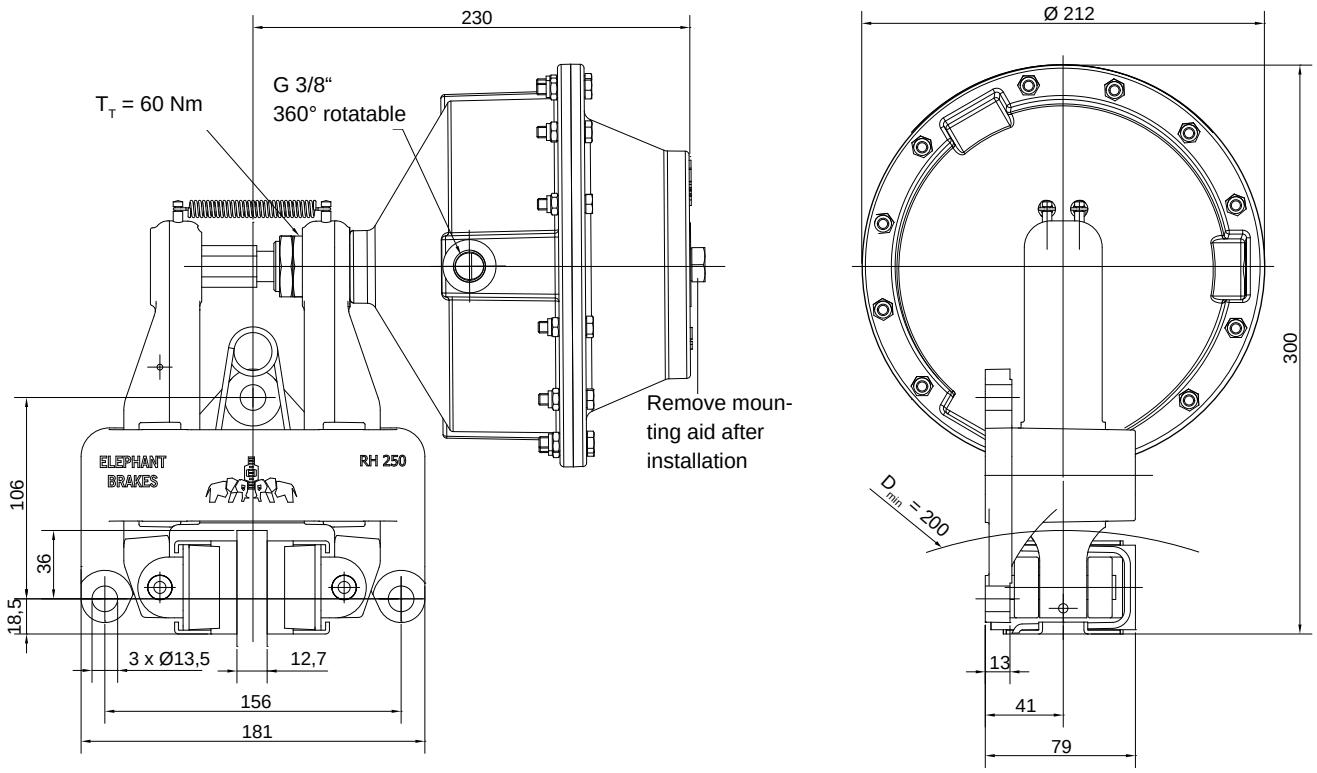

Mounting position is horizontal. Please get in touch if different.

A right hand mounted thruster is standard – left hand mounted please state with order.

Brake Type R&H 300.40X.01

spring-applied, pneumatically released

NOTE:
Optionally, an automatic pad wear adjustment is available. Please get in touch with us.

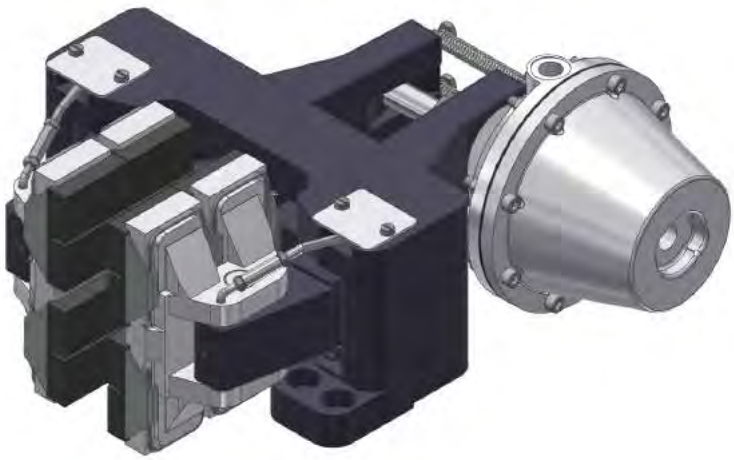

	Nominal disc diameter [mm]								
	560	630	710	800	900	1000	1250	1600	1800
Type	**Braking Torque: $T_{Br\ dyn.}$ [Nm] ($T_{Br\ stat.}$ = 0,9 x $T_{Br\ dyn.}$)**								
R&H 300.405.04	720	830	960	1100	1250	1410	1800	2350	2660
R&H 300.406.04	1270	1460	1690	1940	2200	2480	3170	4170	4680
R&H 300.406.04 66%	840	965	1115	1280	1450	1635	2090	2750	3090
R&H 300.406.04 33%	420	480	560	640	725	820	1045	1375	1545

Brake Type R&H 300.40X.01

spring-applied, pneumatically released

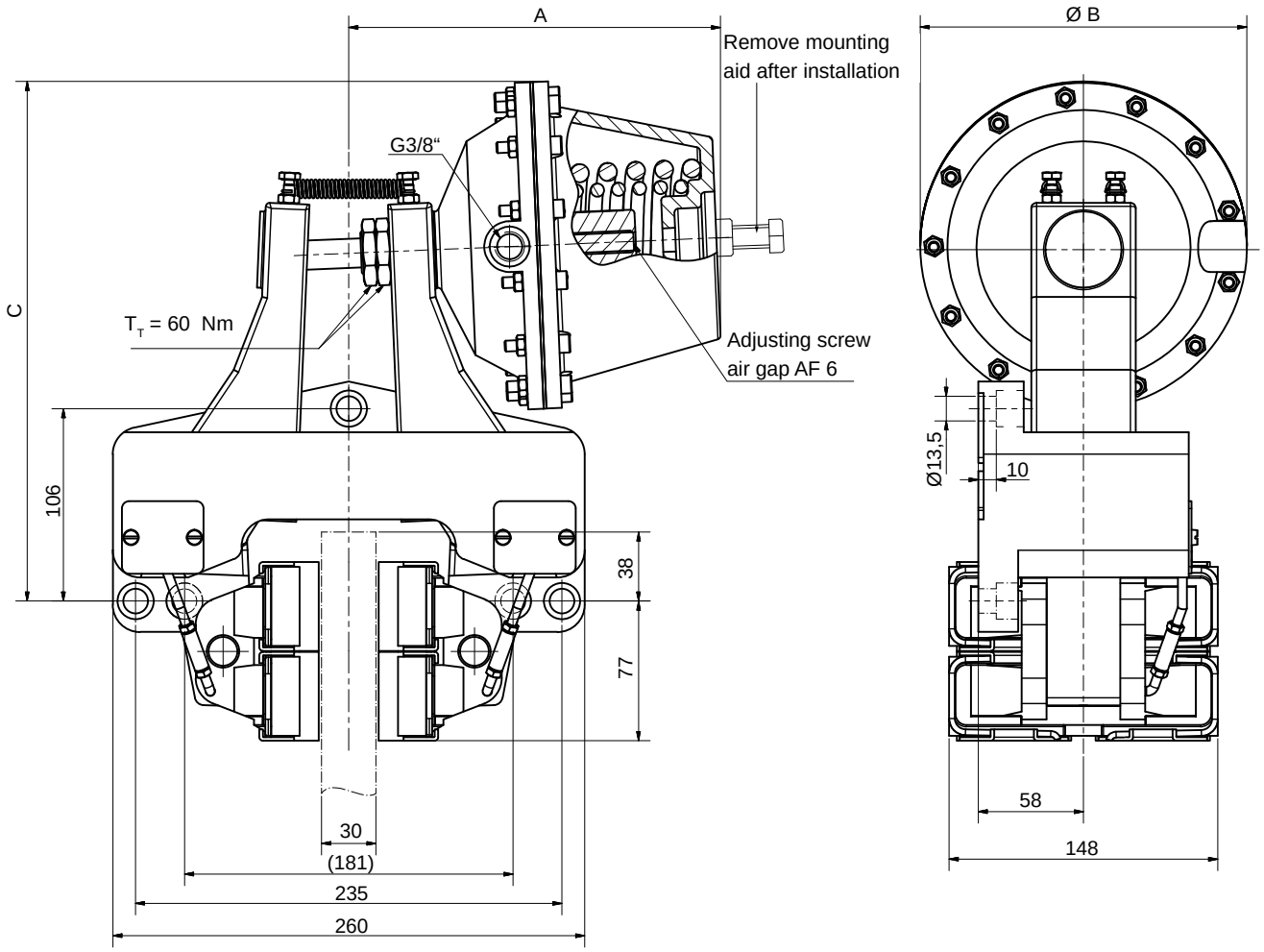

Mounting position is horizontal. Please get in touch if different.

A right hand mounted thruster is standard – left hand mounted please state with order.

Type	Part-No.	A [mm]	Ø B [mm]	C [mm]	$p_{min.}$ [mm]	$p_{max.}$ [mm]	V/stroke [dm³]	Mass [kg]
R&H 300.405.04	12313	210	144	270	5	10	0,12	23
R&H 300.406.04	12765	240	180	285			0,43	24,5
R&H 300.406.04 66%	13226				3,3			
R&H 300.406.04 33%	13227				1,7			

ELEPHANT BRAKES BY RIETSCHOTEN

Brake Type R&H 300.412.04

spring-applied, pneumatically released

Part-No.: 14742

NOTE:
Optionally, an automatic pad wear adjustment is available. Please get in touch with us.

spring force	Nominal disc diameter [mm]								
	560	630	710	800	900	1000	1250	1600	1800
	Braking Torque: $T_{Br\ dyn.}$ [Nm] ($T_{Br\ stat.}$ = 0,9 x $T_{Br\ dyn.}$)								
100%	2140	2520	2850	3280	3750	4230	5420	7080	8030
66%	1410	1660	1880	2160	2480	2790	3580	4670	5300
33%	710	830	940	1080	1240	1400	1790	2340	2650

$p_{min.}$: 5 bar (100%) / 3,3 bar (66%) / 1,7 bar (33%)
$p_{max.}$: 10 bar
max. V / stroke: 0,4 dm³
Mass: 27 kg

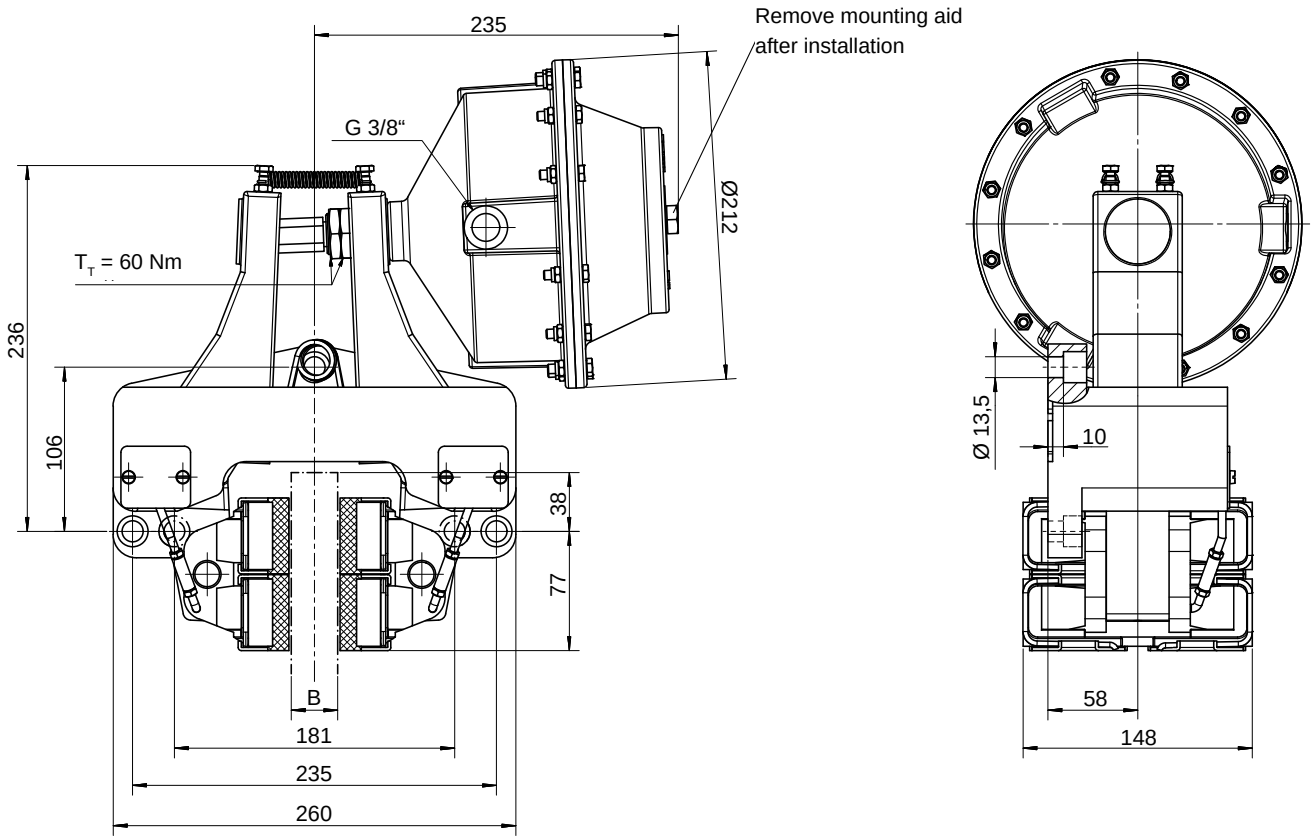

Mounting position is horizontal. Please get in touch if different.

A right hand mounted thruster is standard – left hand mounted please state with order.

Brake Type R&H 350.435.01

spring-applied, pneumatically released

				Nominal disc diameter [mm]							
				610	700	810	915	1000	1220	1520	1820
Type	***Part-No.***	**p_{min} [bar]**	**Mass [kg]**	**Braking Torque: $T_{Br\ dyn.}$ [Nm] ($T_{Br\ stat.}$ = 0,9 x $T_{Br\ dyn.}$)**							
R&H 350.435.01	***14593***	5	61,7	7750	9150	10850	12480	13800	17200	21850	26500
R&H 350.435.01 83%	***14593-83***	4,2	60,8	6430	7595	9005	10360	11455	14275	18135	21995
R&H 350.435.01 71%	***14593-71***	3,6	59,8	5500	6495	7705	8860	9800	12210	15515	18815
R&H 350.435.01 55%	***14593-55***	2,8	58,9	4260	5030	5970	6865	7590	9460	12020	14575

p_{max}: 10 bar
V / stroke: 2,5 dm^3

Brake Type R&H 350.435.01

spring-applied, pneumatically released

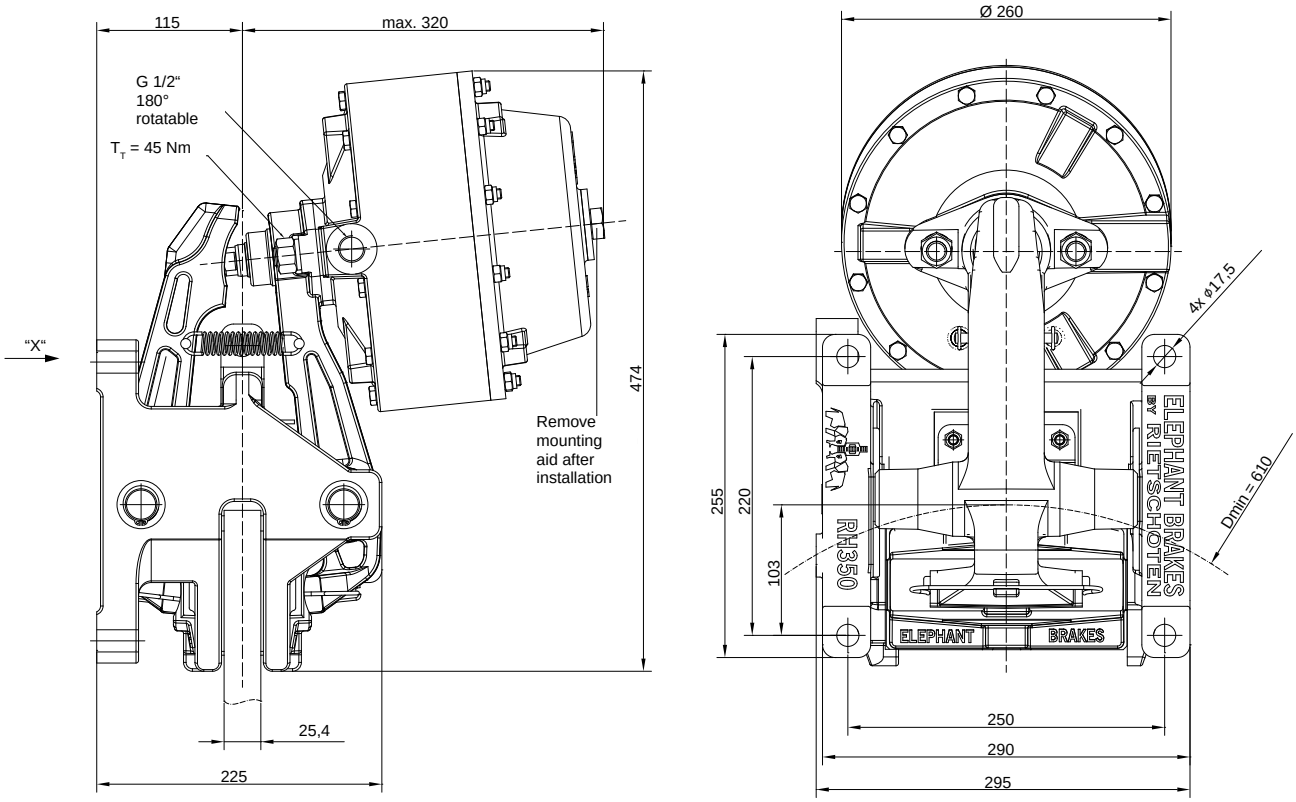

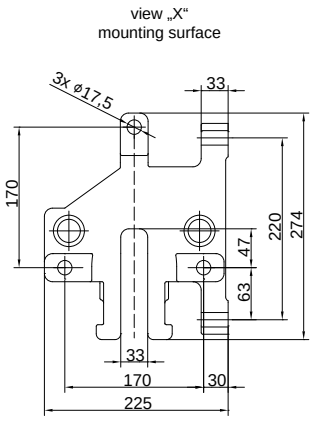

Mounting position is horizontal. Please get in touch if different.

A right hand mounted thruster is standard – left hand mounted please state with order.

spring-applied, hydraulically released brakes

Brake Type R&H 100.5X0.01

spring-applied, hydraulically released

R&H 100.560.01

Nominal disc diameter [mm]							
250	300	350	400	460	515	610	710
Braking Torque: $T_{Br\ dyn.}$ [Nm] ($T_{Br\ stat.}$ = 0,9 x $T_{Br\ dyn.}$)							
120	150	180	210	240	275	330	390

R&H 100.550.01

Nominal disc diameter [mm]							
250	300	350	400	460	515	610	710
Braking Torque: $T_{Br\ dyn.}$ [Nm] ($T_{Br\ stat.}$ = 0,9 x $T_{Br\ dyn.}$)							
190	235	280	330	375	430	515	610

Brake Type R&H 100.5X0.01

spring-applied, hydraulically released

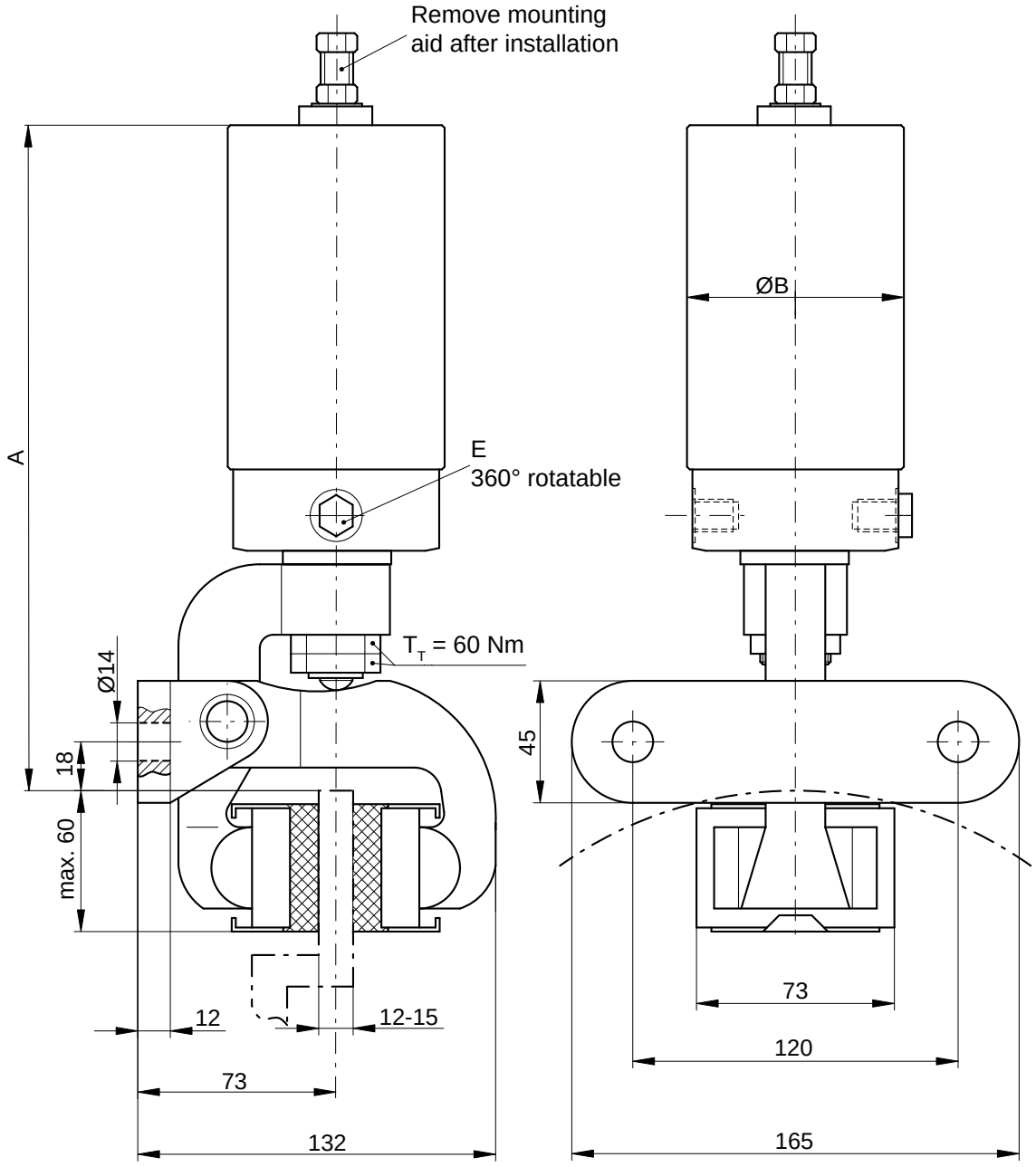

Mounting position is horizontal. Please get in touch if different.

Type	Part-No.	A [mm]	Ø B [mm]	E	$p_{min.}$ [mm]	$p_{max.}$ [mm]	max. oil de-mand [cm³]	Mass [kg]
R&H 100.560.01	12072	260	80	G 1/8“	40	160	15	9
R&H 100.550.01	12100	305	95	G 1/4“	55			11

Brake Type R&H 200.5XX.01

spring-applied, hydraulically released

	Nominal disc diameter [mm]									
	250	300	350	400	460	515	610	710	810	915
	Braking Torque: $T_{Br\ dyn.}$ [Nm] ($T_{Br\ stat.}$ = 0,9 x $T_{Br\ dyn.}$)									
R&H 200.562.01	140	180	210	250	290	330	400	470	540	620
R&H 200.560.01	475	590	710	830	970	1100	1330	1565	1800	2050
R&H 200.550.01	625	780	940	1090	1280	1450	1750	2060	2370	2690
R&H 200.551.01	850	1070	1280	1490	1750	1990	2400	2830	3260	3700
R&H 200.552.01	1300	1620	1950	2270	2660	3020	3640	4290	4940	5620

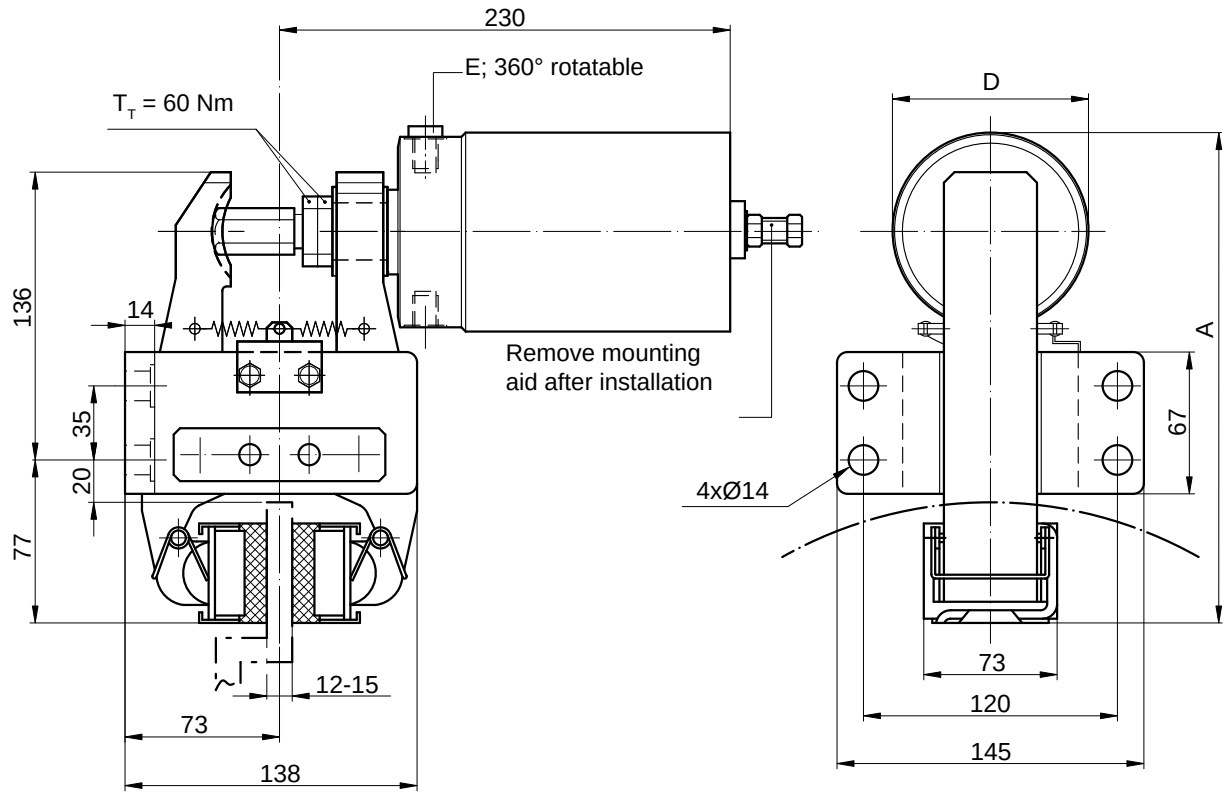

Mounting position is horizontal. Please get in touch if different.

A right hand mounted actuator is standard – „flange side“ mounted please state with order.

Type	*Part-No.*	D [mm]	A [mm]	E	p_{min} [bar]	p_{max} [bar]	max. V / stroke [cm³]	Mass [kg]
R&H 200.562.01	***13597***	80	227	G 1/8“	20	160	25	14
R&H 200.560.01	***11294***				40			
R&H 200.550.01	***11291***	95	234	G 1/4“	55			16
R&H 200.551.01	***11292***				65			
R&H 200.552.01	***11293***				100			

ELEPHANT BRAKES BY RIETSCHOTEN

Brake Type R&H 2XX.5XX.01

spring-applied, hydraulically released

	Nominal disc diameter [mm]							
	350	400	460	515	610	710	810	915
	Braking Torque: $T_{Br\ dyn.}$ [Nm] ($T_{Br\ stat.}$ = 0,9 x $T_{Br\ dyn.}$)							
R&H 215.560.01 **R&H 225.560.01** **R&H 230.560.01**	710	830	970	1100	1330	1565	1800	2050
R&H 215.550.01	940	1090	1280	1450	1750	2060	2370	2690
R&H 215.551.01	1280	1490	1750	1990	2400	2830	3260	3700
R&H 215.552.01 **R&H 225.552.01** **R&H 230.552.01** **R&H 245.552.01**	1950	2270	2660	3020	3640	4290	4940	5620

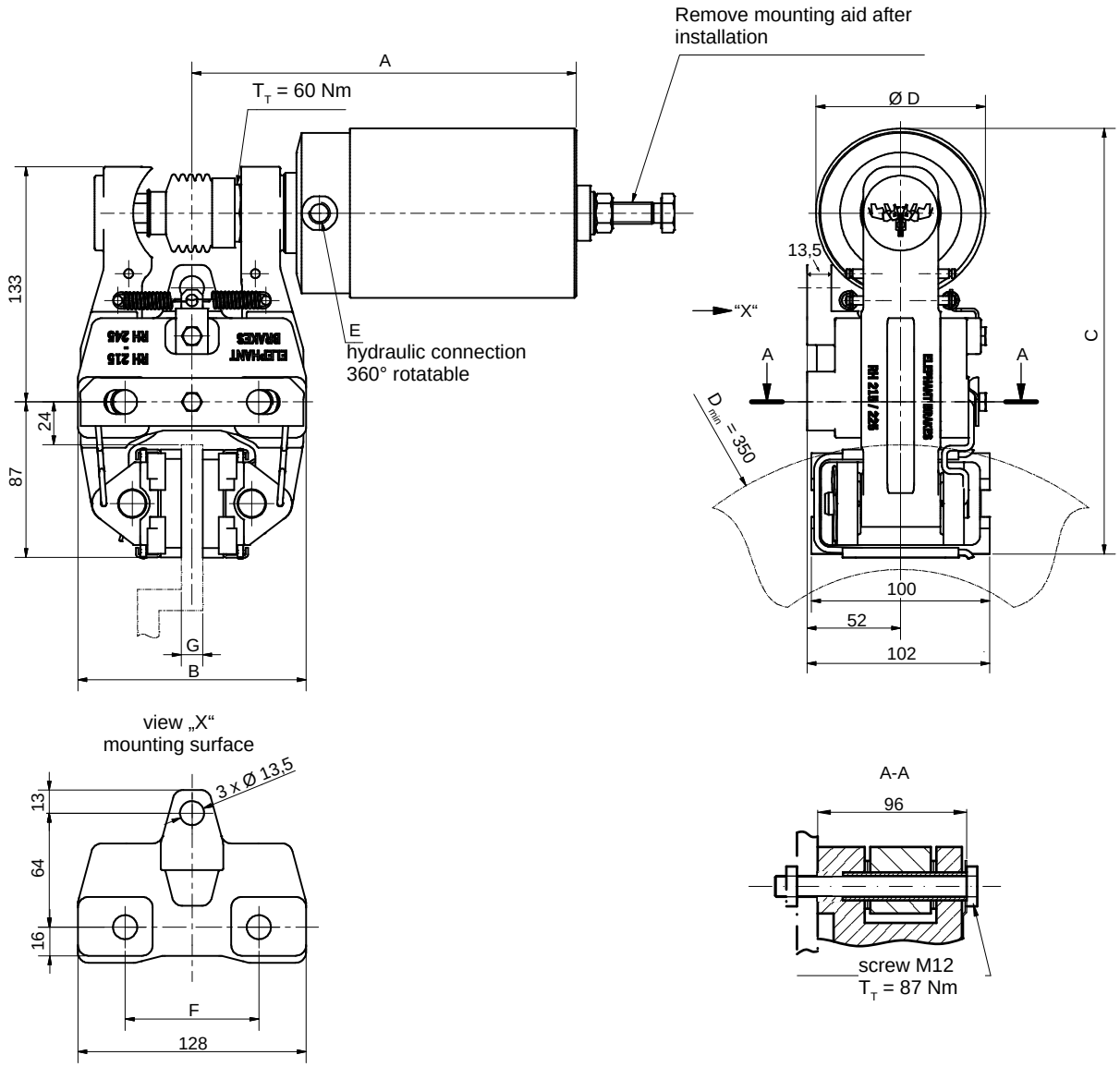

Mounting position is horizontal. Please get in touch if different.

A right hand mounted thruster is standard – left hand mounted please state with order.

Type	Part-No.	p_{min}	p_{max}	A [mm]	B [mm]	C [mm]	Ø D [mm]	E	F [mm]	G [mm]	Mass [kg]
R&H 215.560.01	12275	40	160	230	130	238	80	G 1/8“	75	12-15	13,2
R&H 225.560.01	14216			235	140	248			84	25,4	
R&H 230.560.01	12642			235	144				75	30	13,4
R&H 215.550.01	12276	55		230	130	245	95	G 1/4“		12-15	15,7
R&H 215.551.01	12277	65									
R&H 215.552.01	12278	100									15,1
R&H 225.552.01	12948			235	140	255			84	25,4	
R&H 230.552.01	12804				144	245			75	30	15,3
R&H 245.552.01	14141				154	250			84	45	

Brake Type R&H 250.5XX.01

spring-applied, hydraulically released

	Nominal disc diameter [mm]										
	200	250	300	350	400	460	515	610	710	810	915
	Braking Torque: $T_{Br\ dyn.}$ [Nm] ($T_{Br\ stat.}$ = 0,9 x $T_{Br\ dyn.}$)										
R&H 250.560.01 **R&H 250.560.01 HP**	350	475	590	710	830	970	1100	1330	1565	1800	2050
R&H 250.550.01 **R&H 250.550.01 HP**	490	625	780	940	1090	1280	1450	1750	2060	2370	2690
R&H 250.551.01	660	850	1070	1280	1490	1750	1990	2400	2830	3260	3700

Brake Type R&H 250.5XX.01

spring-applied, hydraulically released

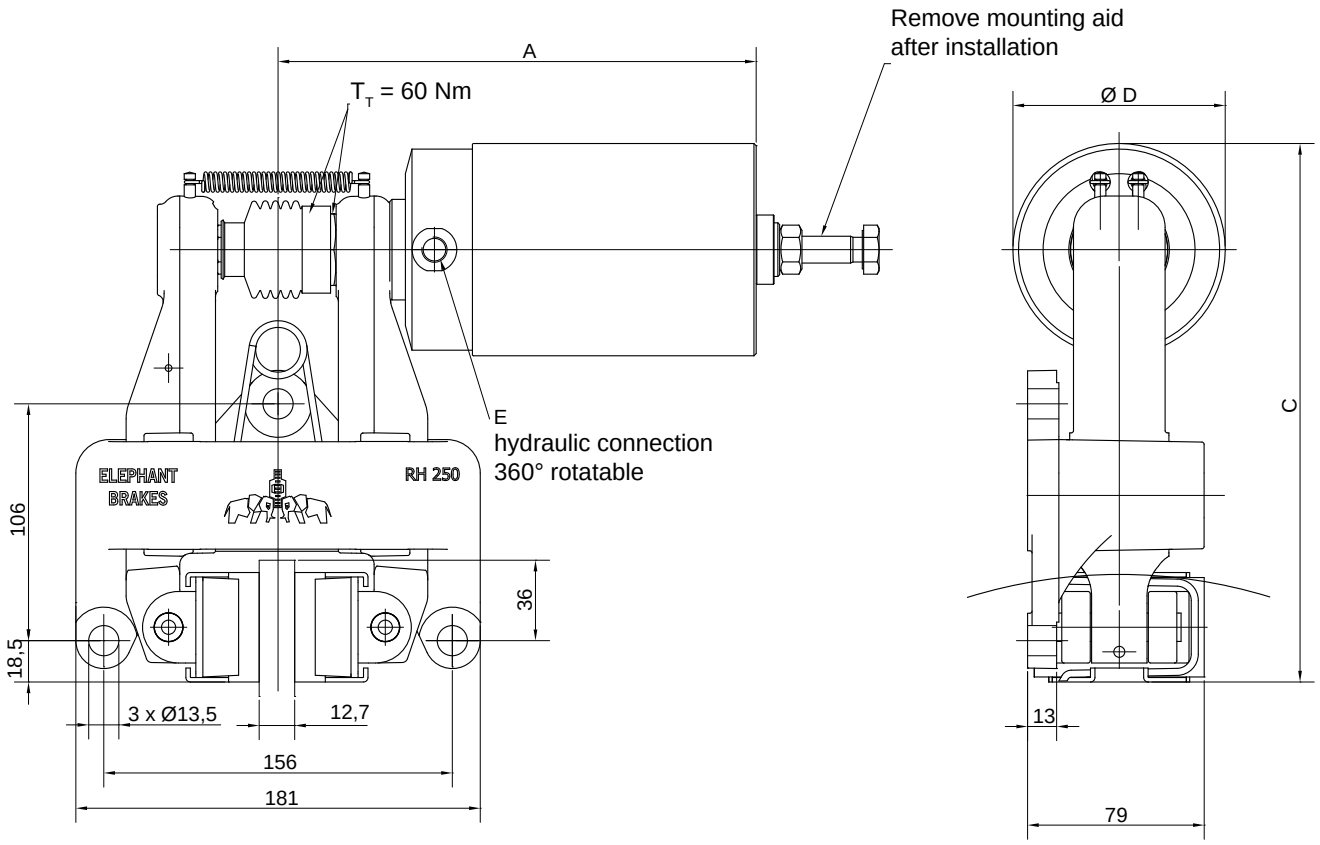

Mounting position is horizontal. Please get in touch if different.

A right hand mounted thruster is standard – left hand mounted please state with order.

Type	Part-No.	A [mm]	C [mm]	D [mm]	E	p_{min} [bar]	p_{max} [bar]	Mass [kg]
R&H 250.560.01	11843	233	234	80	G 1/8“	40	160	12
R&H 250.550.01	12129	240	241	95	G 1/4“	55		14,5
R&H 250.551.01	12130					65		14
R&H 250.560.01 High Pressure	14179	233	234	80	G 1/8“	55	210	12
R&H 250.550.01 High Pressure	14176	240	241	95	G 1/4“	75		14,5

max. oil demand: 25 cm^3

Brake Type R&H 300.5XX.04

spring-applied, hydraulically released

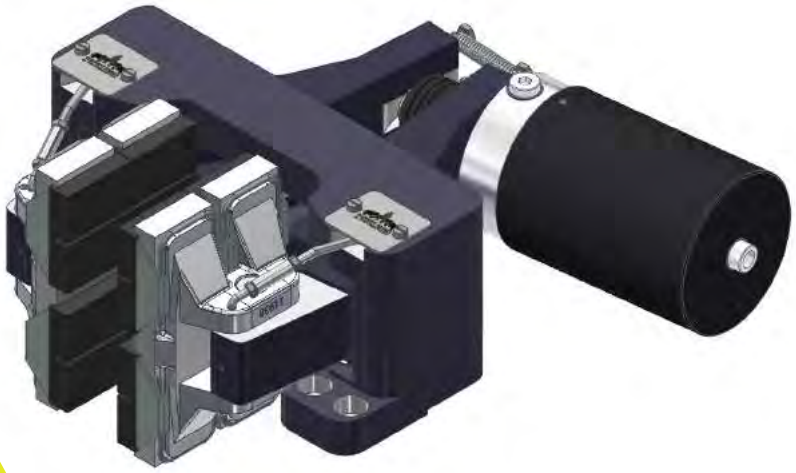

	Nominal disc diameter [mm]							
	560	630	710	800	900	1000	1250	1600
	Braking Torque: $T_{Br\ dyn.}$ [Nm] ($T_{Br\ stat.}$ = 0,9 x $T_{Br\ dyn.}$)							
R&H 300.551.04	1970	2270	2600	3000	3420	3850	4920	6400
R&H 300.552.04 R&H 300.552.04 HP	2980	3440	3940	4550	5180	5830	7450	9700
R&H 300.563.04	3530	4080	4670	5390	6140	6900	8830	11500

Brake Type R&H 300.5XX.04

spring-applied, hydraulically released

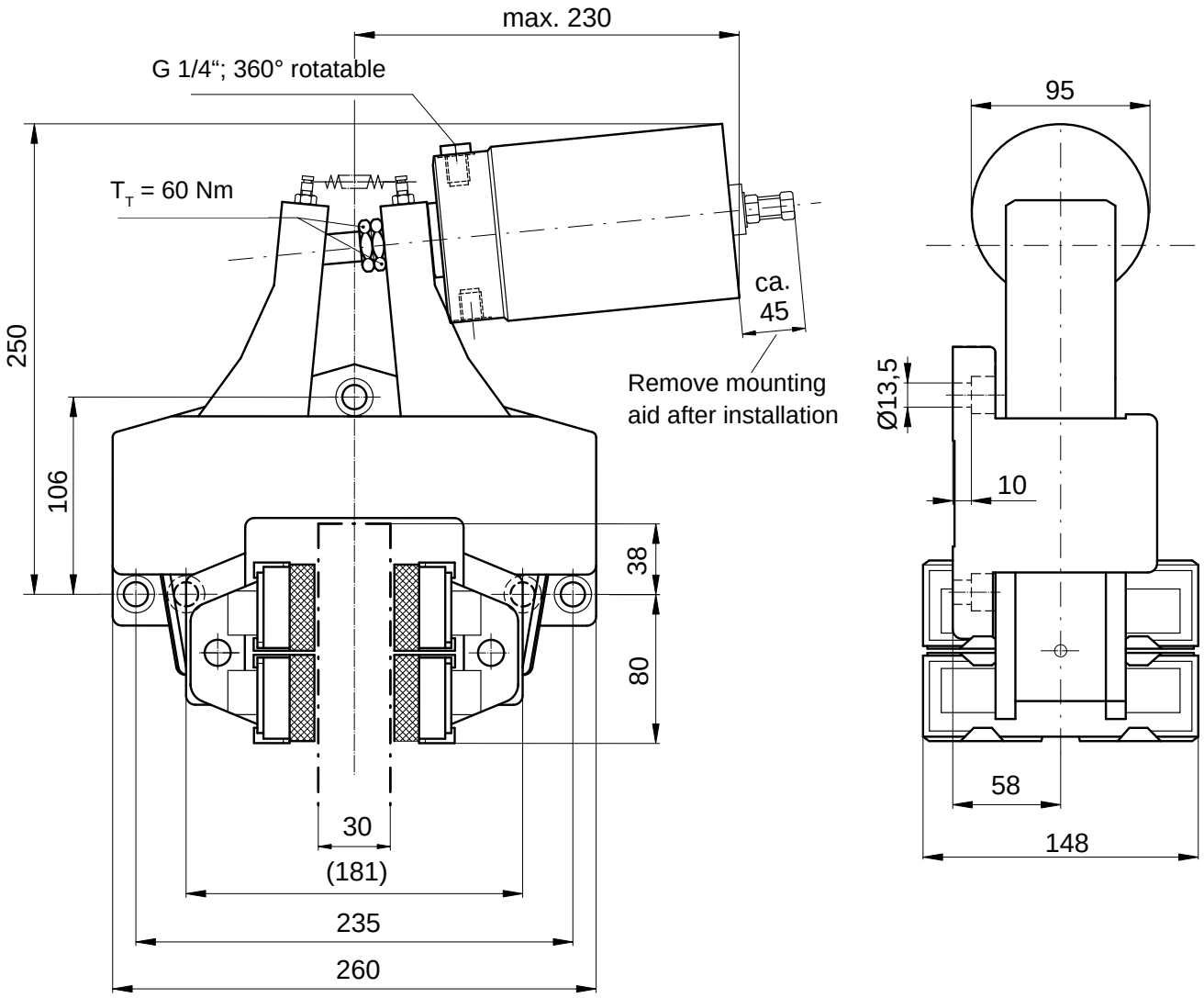

Mounting position is horizontal. Please get in touch if different.

A right hand mounted thruster is standard – left hand mounted please state with order.

Type	Part-No.	p_{min} [bar]	p_{max} [bar]	max. V / stroke [cm³]	Mass [kg]
R&H 300.551.04	12260	65	160	25	29
R&H 300.552.04	12261	100			
R&H 300.552.04 High Pressure	14259	135	210		
R&H 300.563.04	12256	130	160		

Brake Type EBS 001

spring-applied, hydraulically released

NOTE:
Available soon!

Braking torque T_{Br} [kNm] = Braking force [kN] x eff. disc radius [m]
eff. disc radius = (0,5 x brake disc o/d [m]) - 0,98 m

Type	*Part-No.*	Braking force [kN]	Loss of force per 1 mm stroke [%]	$p_{min.}$ [bar]	$p_{max.}$ [bar]
EBS 001 – 30	***60099-30***	30	8	135	200
EBS 001 – 22	***60099-22***	22	9	114	160
EBS 001 – 15	***60099-15***	15	8	77	120

Oil demand at 2 mm air gap: 12,3 cm^3
Brake suitable for mounting on brake discs according to DIN 15432 Dmin. Ø ≥ 500 mm
Mass: 22,5 kg per caliper half (total mass: 45 kg)

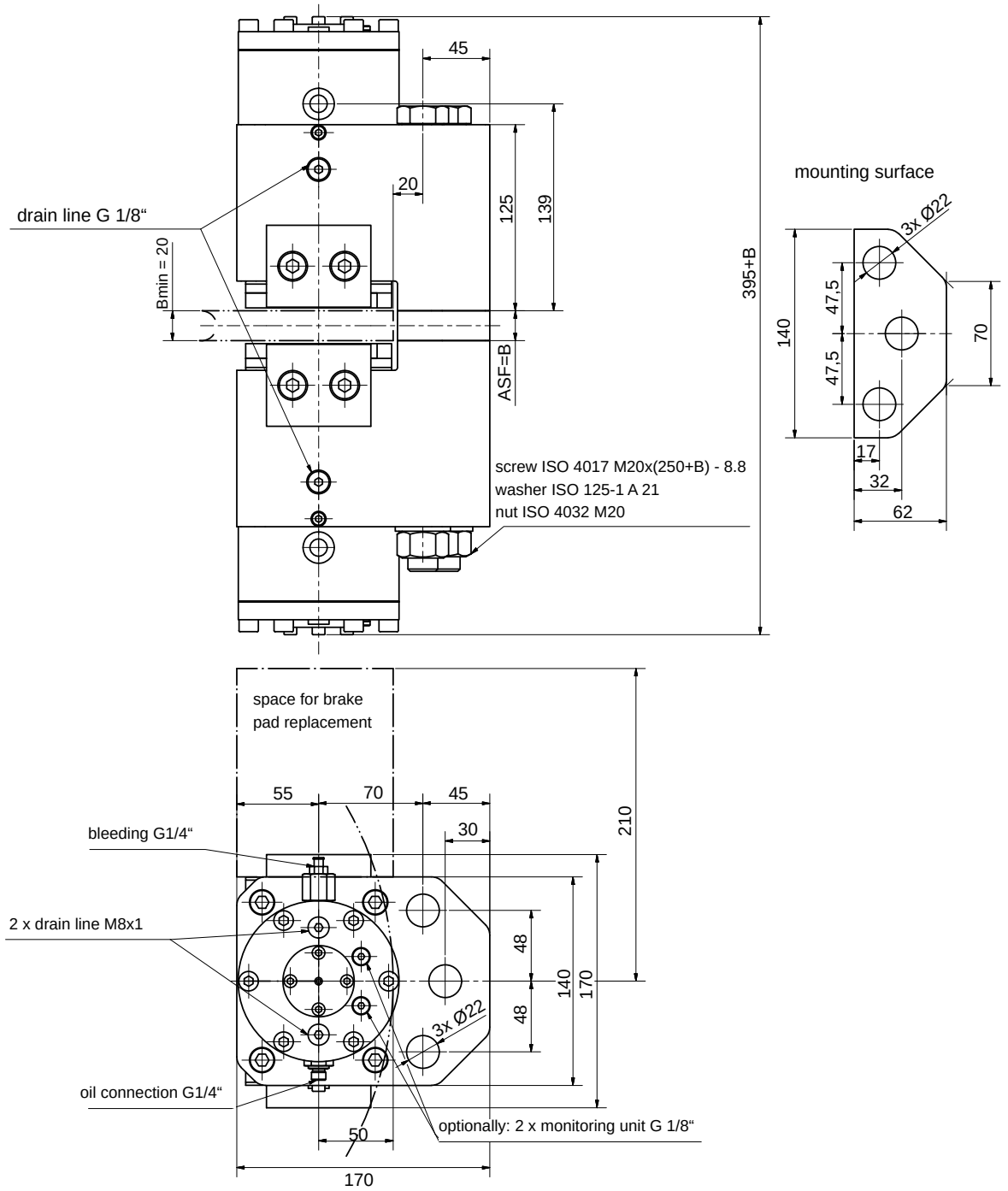

Fixing screws and nuts are not scope of supply!

Min. quality of fixing materials: 8.8

Brake Type EBS 002

spring-applied, hydraulically released

Braking torque T_{Br} [kNm] = Braking force [kN] x eff. disc radius [m]
eff. disc radius = (0,5 x brake disc o/d [m]) - 0,078 m

Type	*Part-No.*	Braking force [kN]	Loss of force per 1 mm stroke [%]	$p_{min.}$ [bar]	$p_{max.}$ [bar]
EBS 002 – 50	***60096-50***	50	9	134	180
EBS 002 – 46	***60096-46***	46	10	125	171
EBS 002 – 41	***60096-41***	41	6,6	106	162
EBS 002 – 39	***60096-39***	39	7,5	100	146
EBS 002 – 36	***60096-36***	36	8,5	95	141
EBS 002 – 31	***60096-31***	31	8,2	73	119
EBS 002 – 29	***60096-29***	29	9,2	64	110

Oil demand at 2 mm air gap: 27 cm³
Brake suitable for mounting on brake discs according to DIN 15432 Dmin. Ø ≥ 500 mm
Mass: 45 kg per caliper half (total mass: 90 kg)

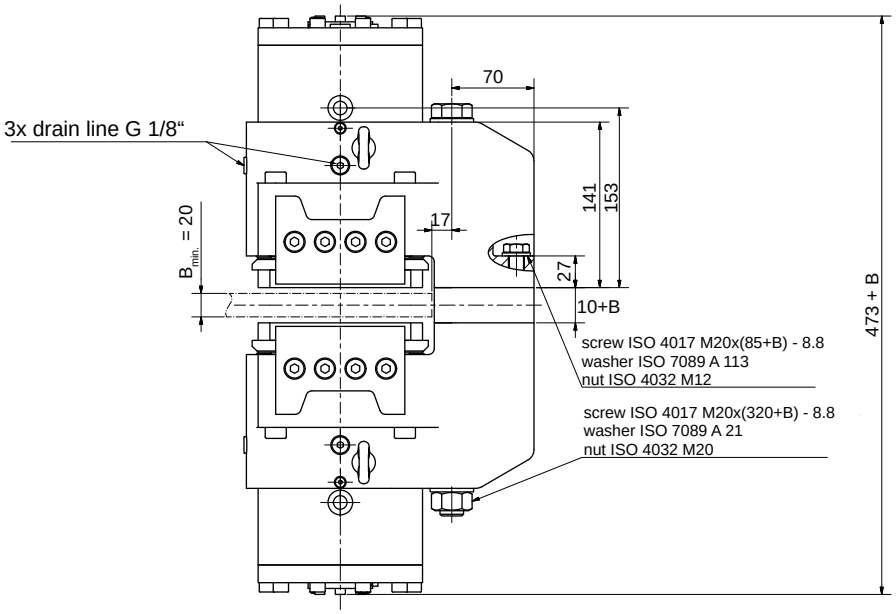

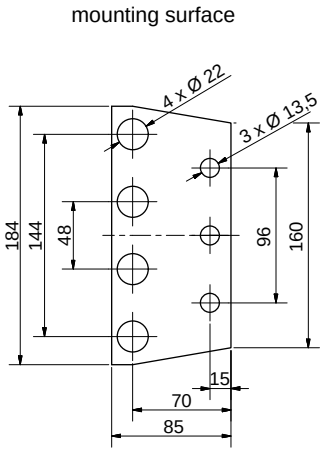

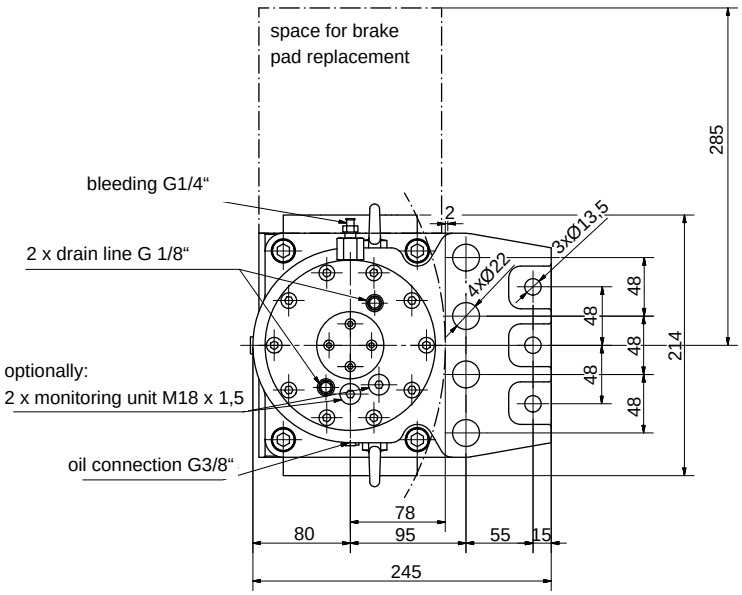

Fixing screws and nuts are not scope of supply!

Min. quality of fixing materials: 8.8

Brake Type EBS 004

spring-applied, hydraulically released

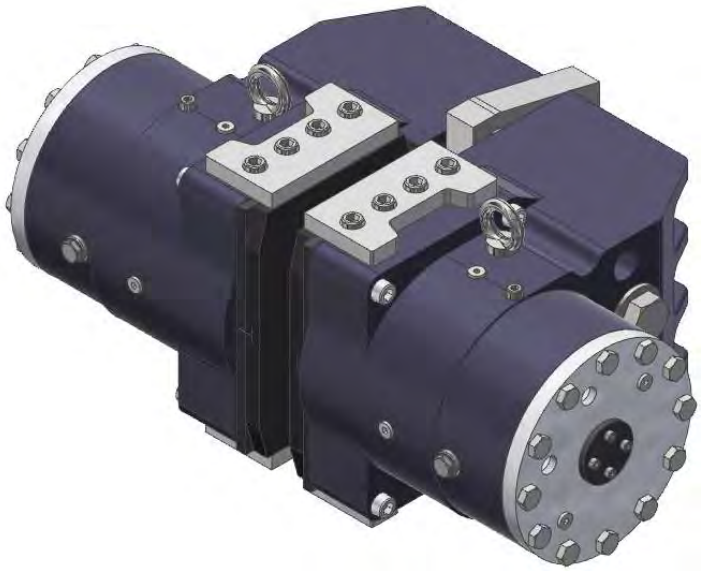

Braking torque T_{Br} [kNm] = Braking force [kN] x eff. disc radius [m]
eff. disc radius = (0,5 x brake disc o/d [m]) - 0,095 m

Type	*Part-No.*	Braking force [kN]	Loss of force per 1 mm stroke [%]	$p_{min.}$ [bar]	$p_{max.}$ [bar]
EBS 004 – 104	***60095-104***	104	8	130	180
EBS 004 – 96	***60095-96***	96	9	122	172
EBS 004 – 88	***60095-88***	88	10,2	114	164
EBS 004 – 80	***60095-80***	80	11,8	106	156
EBS 004 – 72	***60095-72***	72	13,9	97	147
EBS 004 – 62	***60095-62***	62	16,9	88	138
EBS 004 – 56	***60095-56***	56	6	68	118
EBS 004 – 53	***60095-53***	53	6,7	65	115
EBS 004 – 49	***60095-49***	49	7,6	62	112

Oil demand at 2 mm air gap: 56 cm^3
Brake suitable for mounting on brake discs according to DIN 15432 Dmin. Ø ≥ 800 mm
Mass: 95 kg per caliper half (total mass: 190 kg)

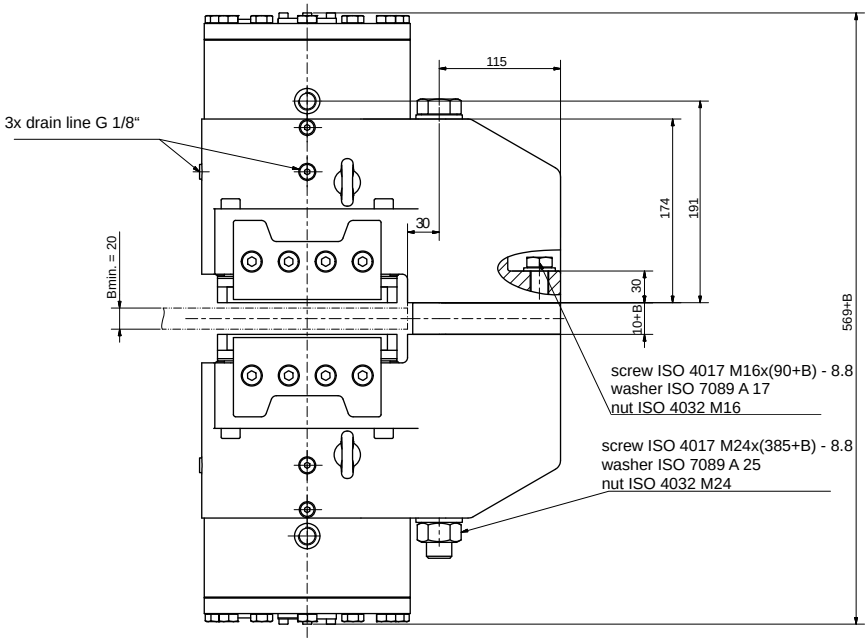

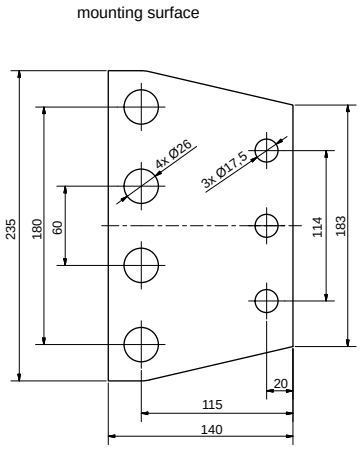

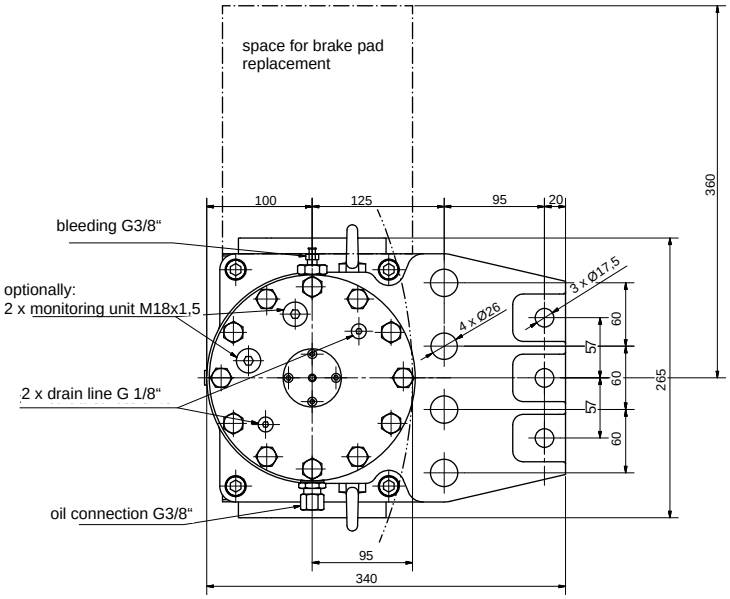

Threaded bolts, fixing screws and nuts are not scope of supply!
Min. quality of fixing materials: 8.8

Brake Type EBS 006-200

spring-applied, hydraulically released

NOTE:
Available soon!

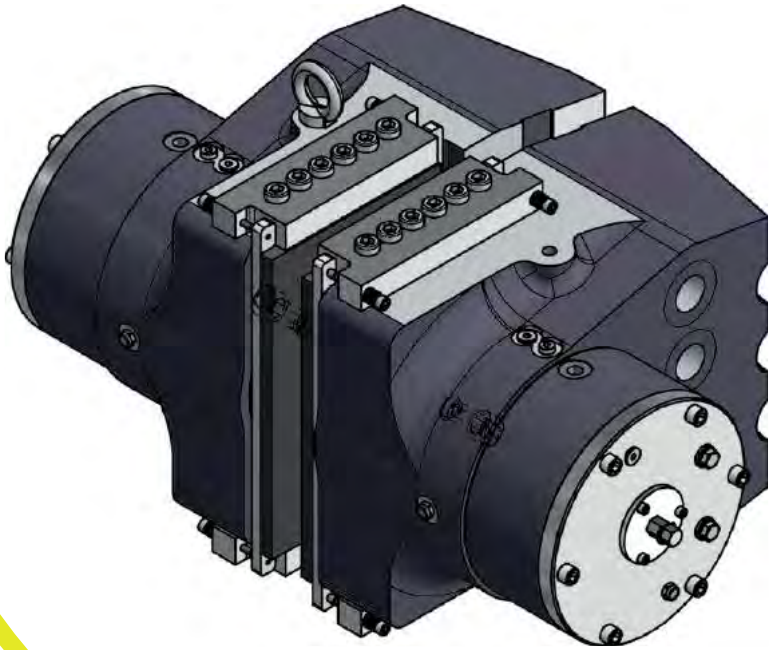

Braking torque T_{Br} [kNm] = Braking force [kN] x eff. disc radius [m]
eff. disc radius = (0,5 x brake disc o/d [m]) - 0,12 m

Braking force: 200 kN
$p_{min.}$: 110 bar
$p_{max.}$: 150 bar
Brake pad surface A_B: 870 cm²
Oil demand at 2 mm air gap (per side): 100 cm³
Brake suitable for mounting on brake discs according to DIN 15432 Dmin. Ø ≥ 1200 mm
Mass: 523 kg

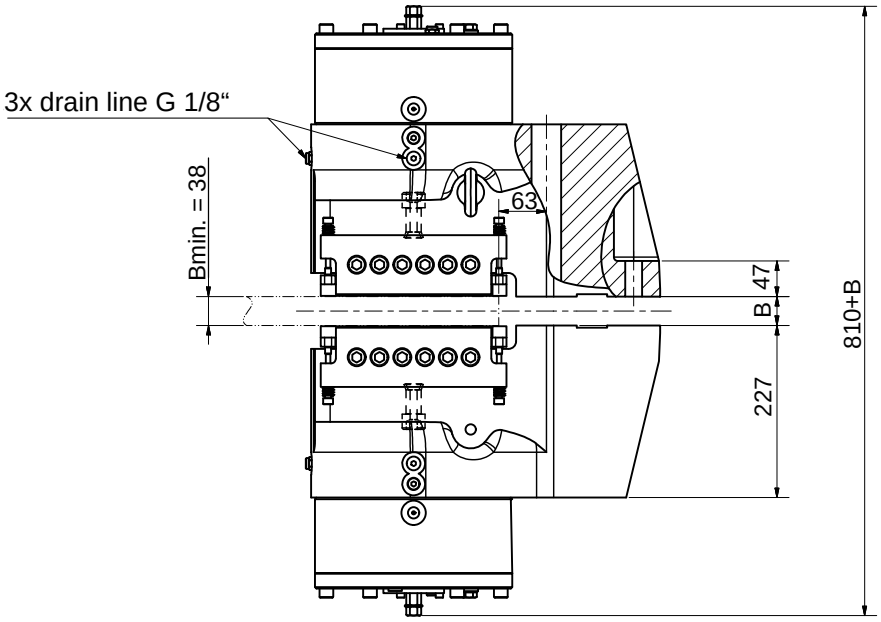

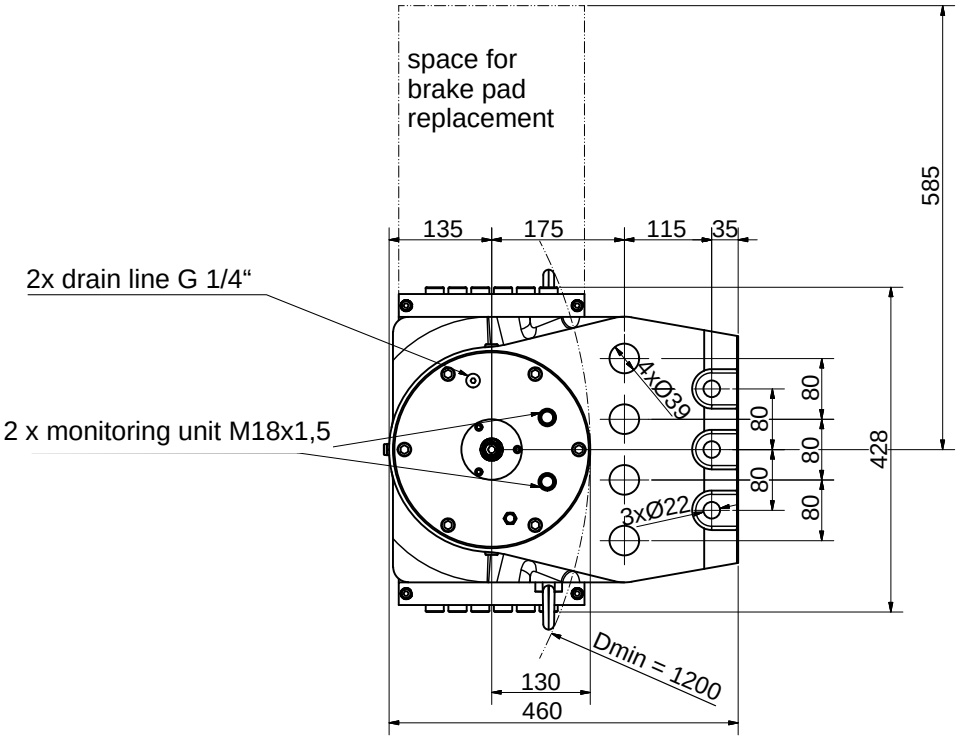

Threaded bolts, fixing screws and nuts are not scope of supply!
Min. quality of fixing materials: 12.9

Brake Type EBS 008-400

spring-applied, hydraulically released

NOTE:
Available soon!

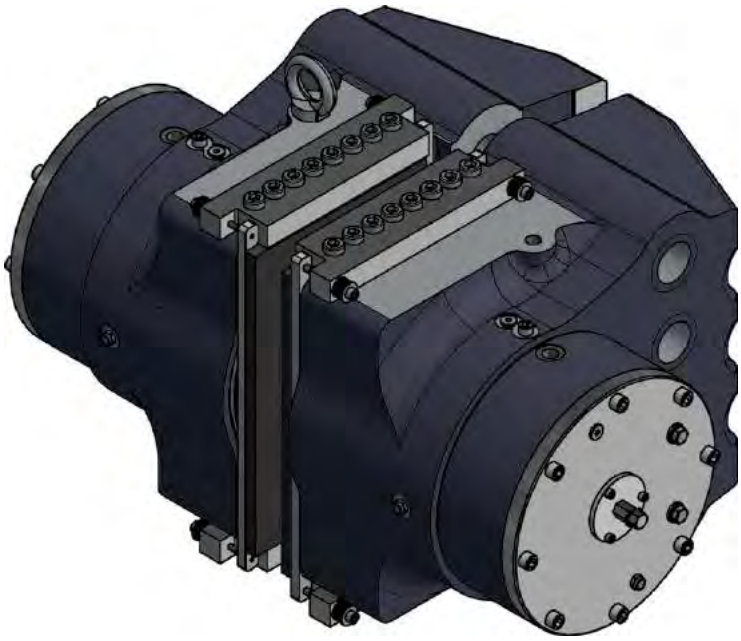

Braking torque T_{Br} [kNm] = Braking force [kN] x eff. disc radius [m]
eff. disc radius = (0,5 x brake disc o/d [m]) - 0,15 m

Braking force: 400 kN
$p_{min.}$: 170 bar
$p_{max.}$: 235 bar
Brake pad surface A_B: 1240 cm²
Oil demand at 2 mm air gap (per side): 94 cm³
Brake suitable for mounting on brake discs according to DIN 15432 Dmin. Ø ≥ 1500 mm
Mass: 690 kg

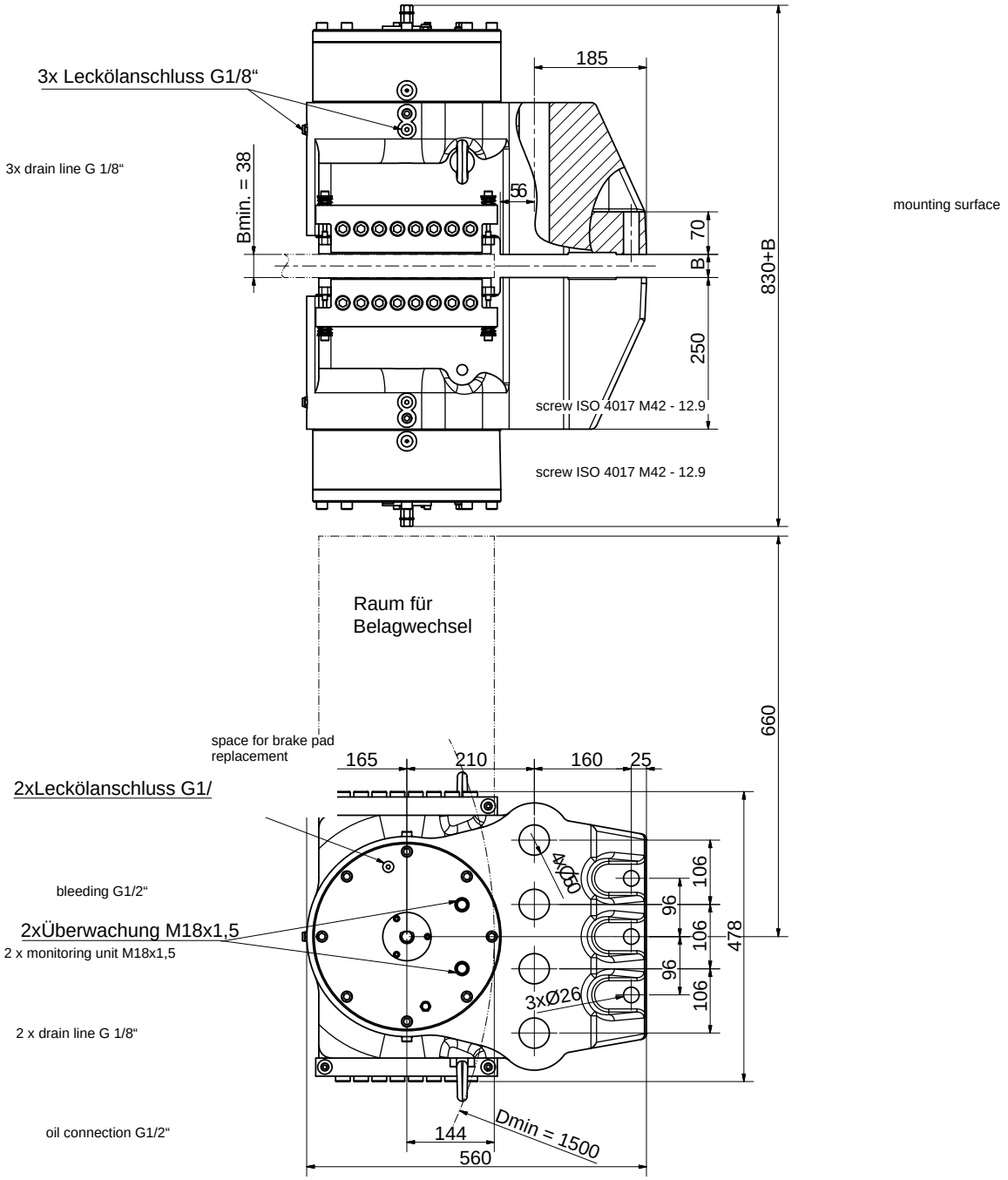

Threaded bolts, fixing screws and nuts are not scope of supply!
Min. quality of fixing materials: 12.9

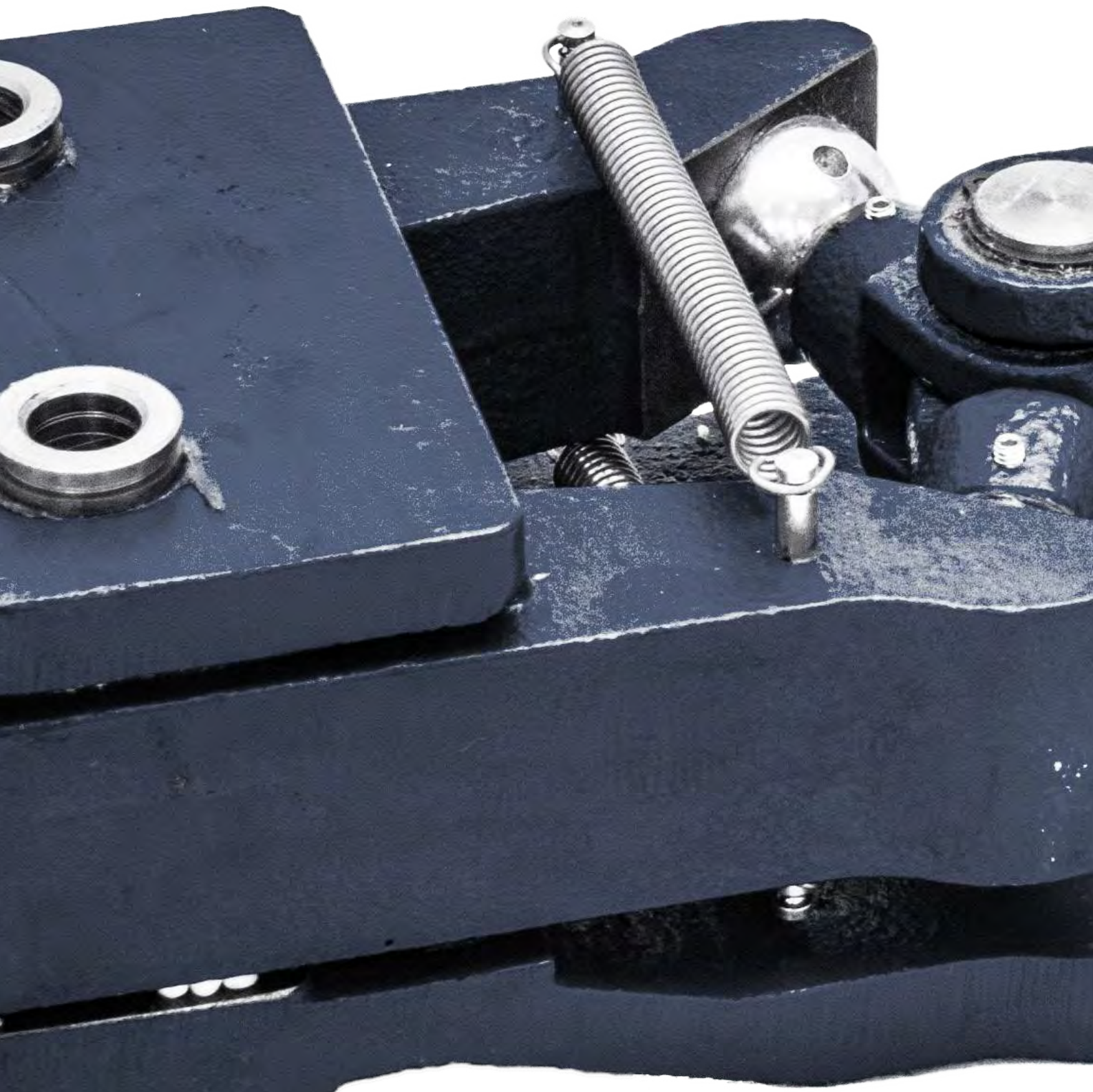

spring-applied, electrically released brakes

Brake Type EMS

spring-applied, electrically released

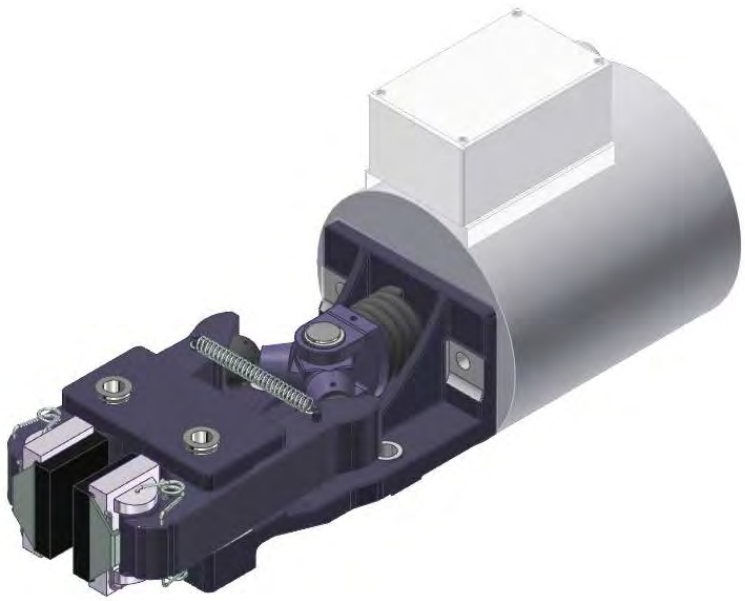

	Nominal disc diameter [mm]							
	200	250	300	350	400	460	515	610
	Braking Torque: $T_{Br\ dyn.}$ [Nm] ($T_{Br\ stat.}$ = 0,9 x $T_{Br\ dyn.}$)							
EMS 120	40	55	70	90	105	120	135	160
EMS 140	75	100	125	155	180	215	240	280
EMS 170	130	175	220	275	320	370	420	490
EMS 170 S	220	290	360	430	510	590	670	780

Brake Type EMS

spring-applied, electrically released

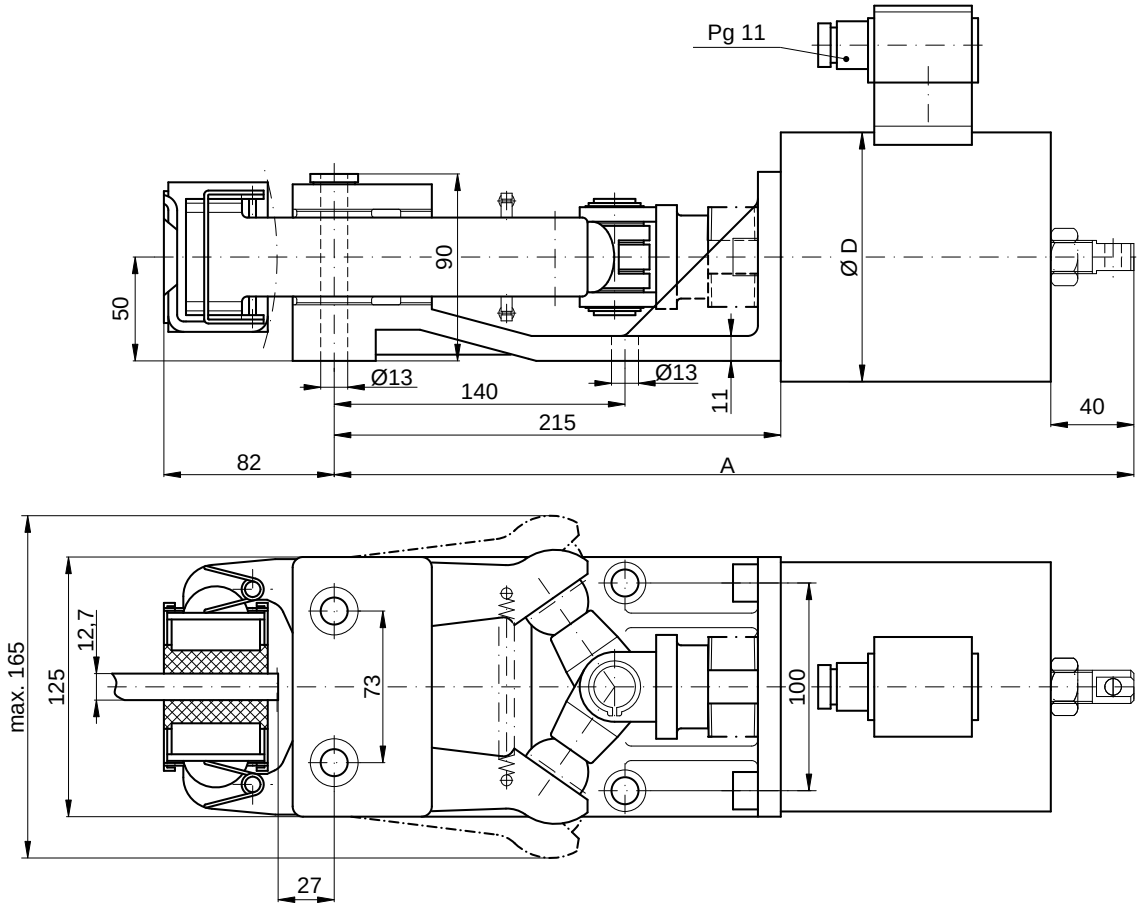

Type	Part-No.	D [mm]	A [mm]	P [W]	I max. [A]	Mass [kg]
EMS 120	**11251**	120	385	52	0,25	21
EMS 140	**11252**	137	410	80	0,39	27
EMS 170	**11253**	165	443	95	0,46	40
EMS 170 S	**11700**			280 / 70	1,35 / 0,68	

Type of protection: IP 65
Duty cycle ED: 100 %
Supply voltage: 230 VAC, 50/60 Hz (other on request)
Admissibile switching frequency EMS170S: max. 240 / h
Brake application time: 600 ms for EMS 120 - 170 / 180 ms for EMS 170 S
Brake release time: 350 ms
Ambient temperature: 40° C

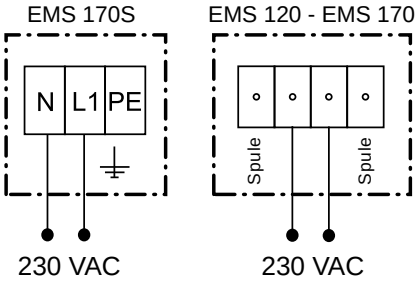

EHS-Brake Unit Type R&H 300

spring-applied, electro-hydraulically released

NOTE:
Configuration according to customer needs possible!

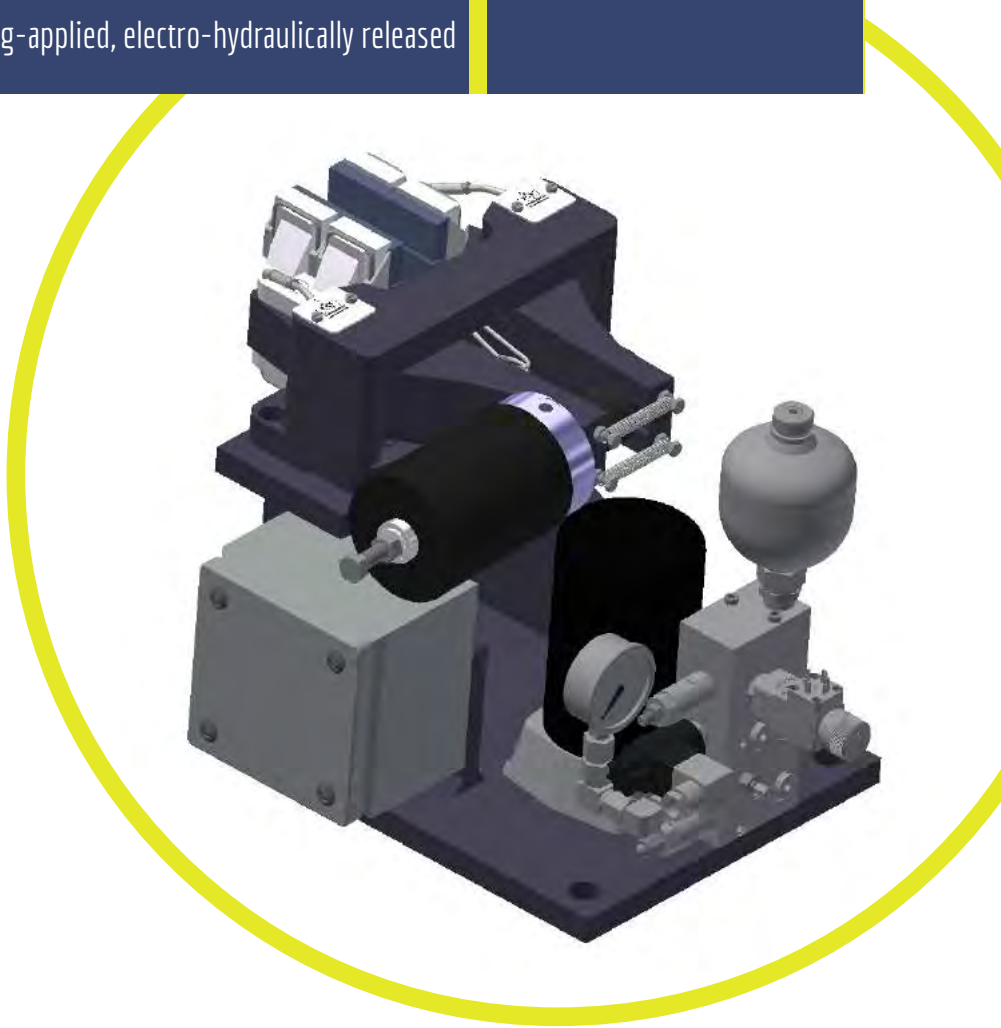

		Nominal disc diameter [mm]							
		560	630	710	800	900	1000	1250	1600
Type	***Part-No.***	**Braking Torque: $T_{Br\ dyn.}$ [Nm] ($T_{Br\ stat.}$ = 0,9 x $T_{Br\ dyn.}$)**							
R&H 300.551.04	***50933***	1970	2270	2600	3000	3420	3850	4920	6400
R&H 300.552.04	***50436***	2980	3440	3940	4550	5180	5830	7450	9700
R&H 300.563.04	***50437***	3530	4080	4670	5390	6140	6900	8830	11500

Operating voltage:
Standard: 380-420 VAC 50 Hz / 440-480 VAC 60 Hz
Power input: 0,3 kW
Switching frequency: max. 30/min.
Brake release time: 150 ms
Brake application time: 70 - 100 ms

Control voltage:
E-valve : 24 VDC, 26 W
alternative: 230 VAC, 26 W
Type of protection: IP 54

A right hand mounted thruster is standard – left hand mounted please state with order.

Mass:depending on axle height approx. 50 kg

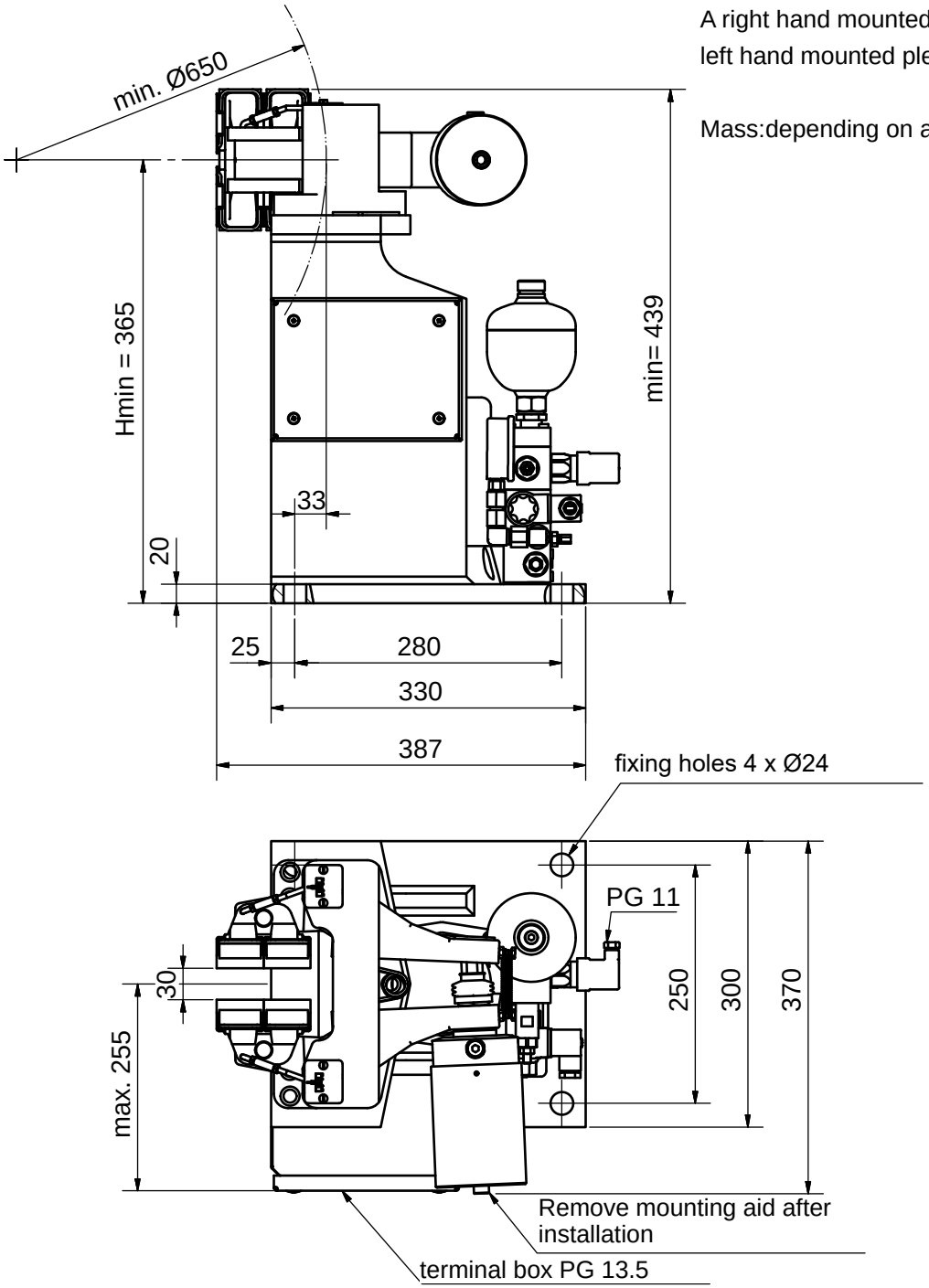

EHS-Brake Unit Type EBS 004

spring-applied, electro-hydraulically released

NOTE:
Configuration according to customer needs possible!

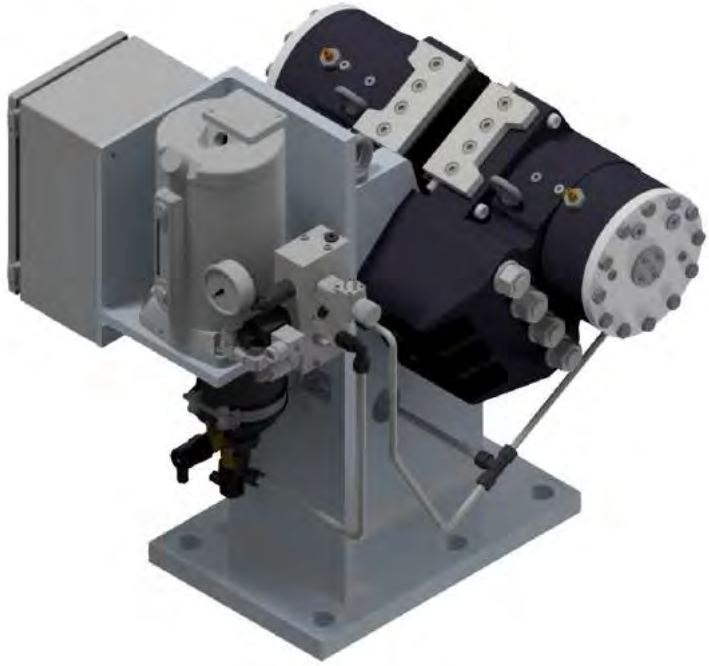

Braking torque T_{Br} [kNm] = Braking force [kN] x eff. disc radius [m]
eff. disc radius = (0,5 x brake disc o/d [m]) - 0,095 m

Braking force: 104 kN
Loss of force per 1 mm stroke: 8%
Mass: depending on axle height approx. 330 kg

Operating voltage: 380-420 VAC 50 Hz / 440-480 VAC 60 Hz
Power input: 0,7 kW, cos Φ = 0,8 (50 Hz) / 0,8 kW, cos Φ = 0,8 (60 Hz)
Switching frequency: 240/h
Brake release time: 0,3 s
Brake application time: 0,2 s

Control voltage:
E-valve: 24 VDC
alternative: 230 VAC 50 Hz / 120 Vac 60 Hz
Type of protection: IP 54

Different operating and control voltages on request. Wear adjustment and monitoring units can be retrofitted.

EHS-Brake Unit Type EBS 004

spring-applied, electro-hydraulically released

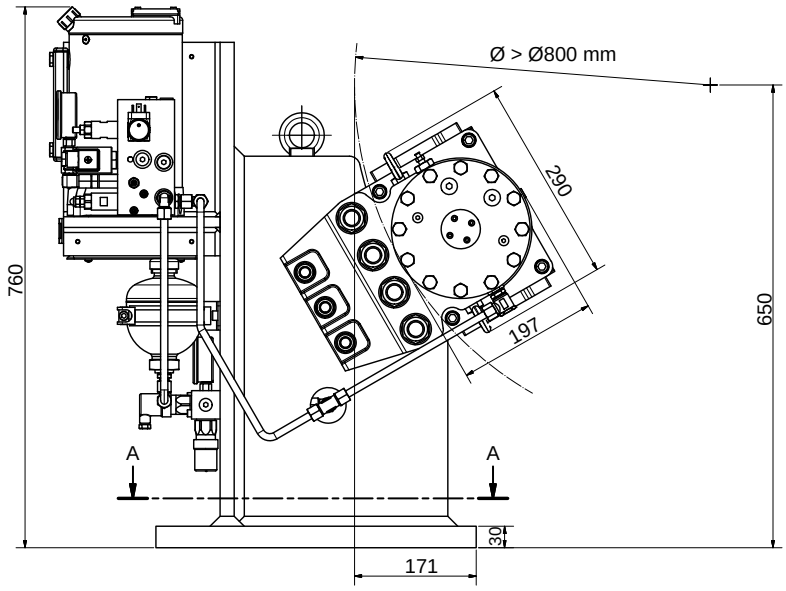

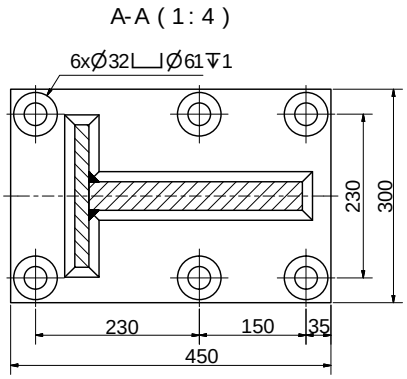

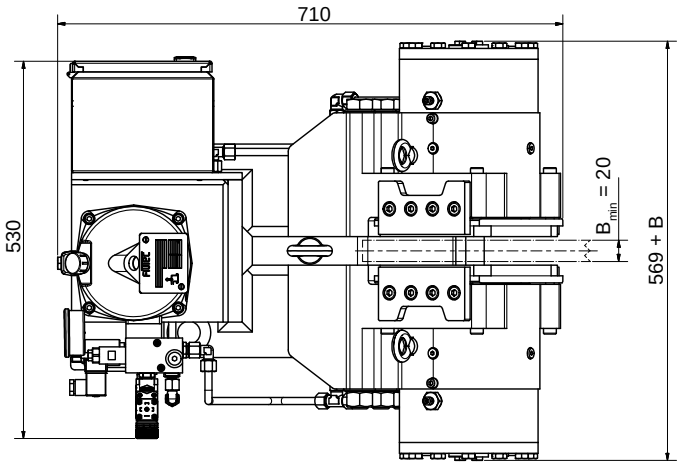

control units

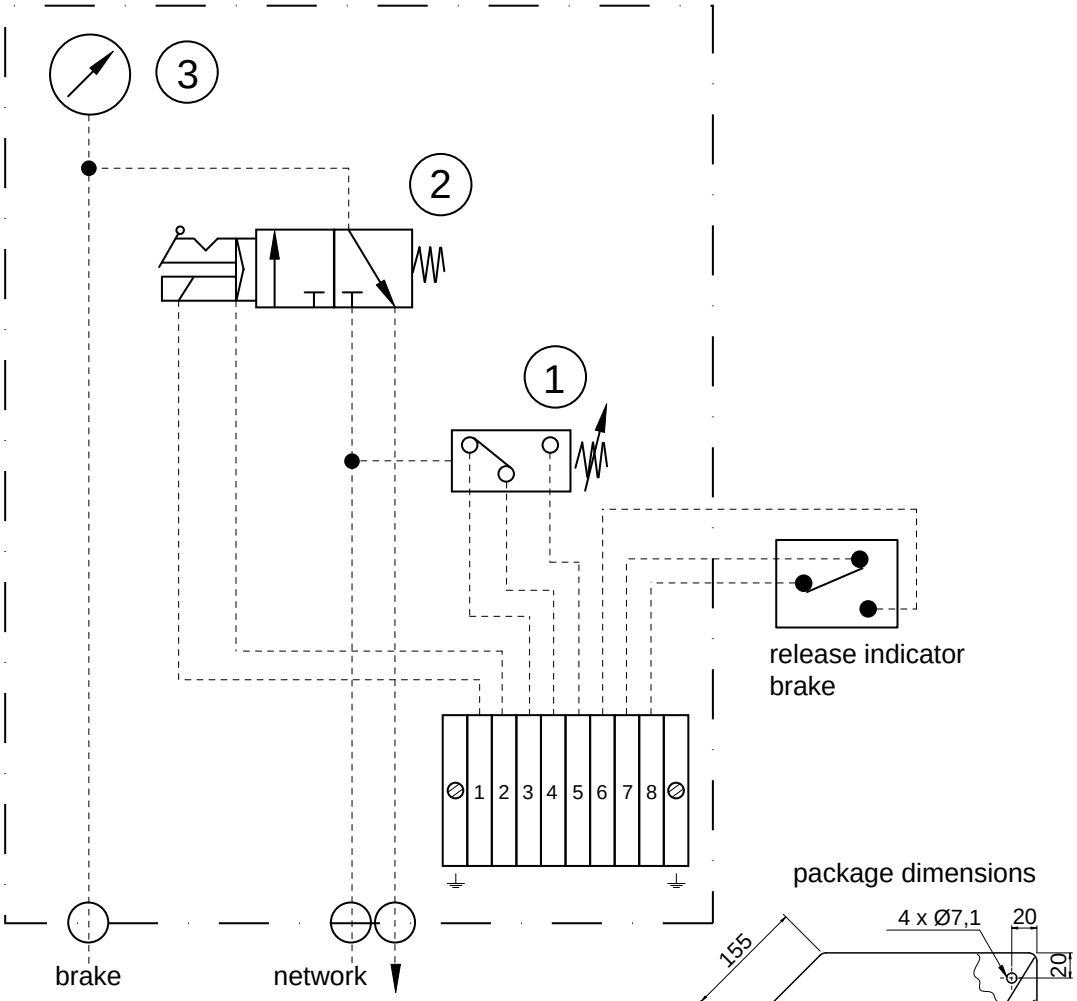

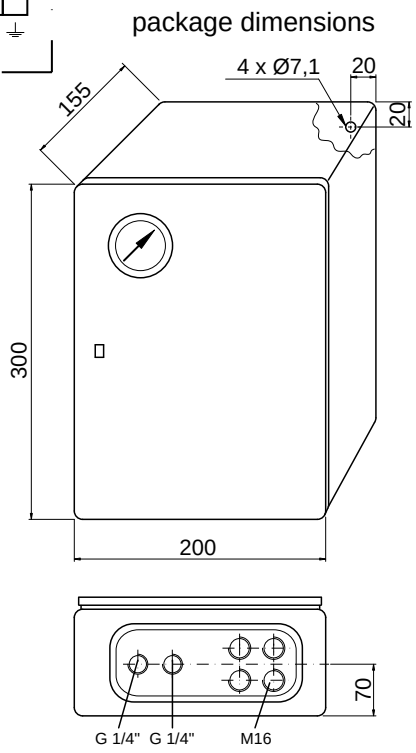

Valve voltage: 24 VDC

Item	Component	Part-No.
1	pressure switch – 0,5-10 bar	10197
2	electromagnetic valve 3/2 W, NW 7, 24 VDC	10170
3	manometer	12785

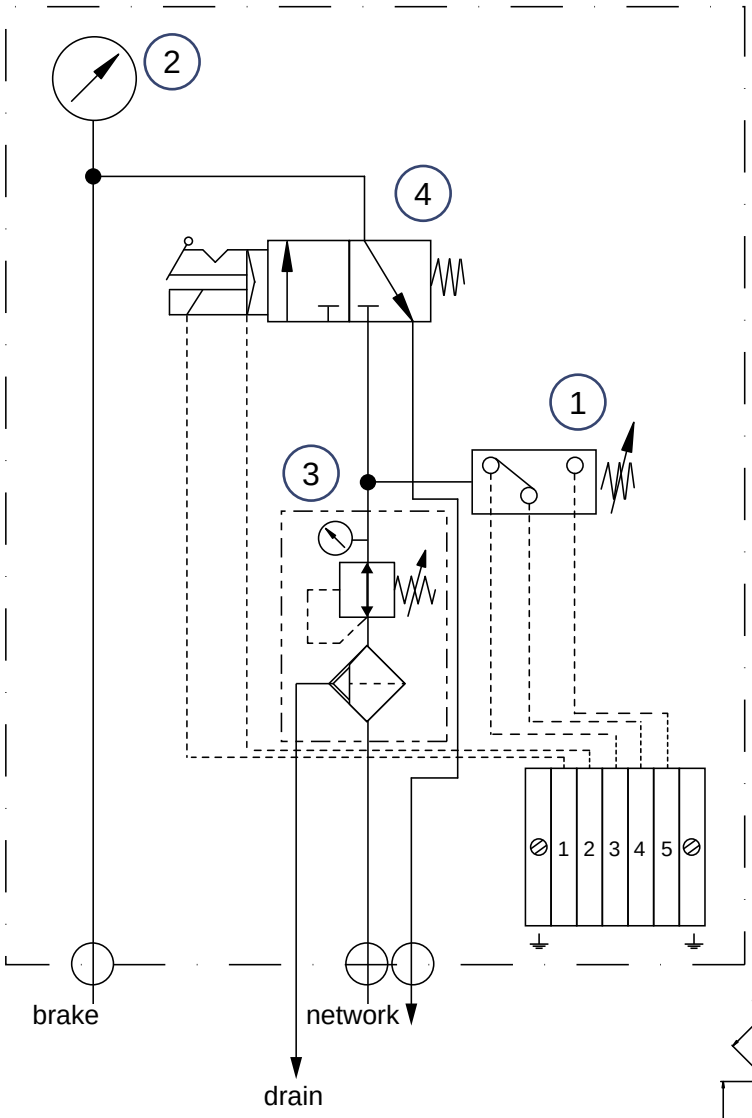

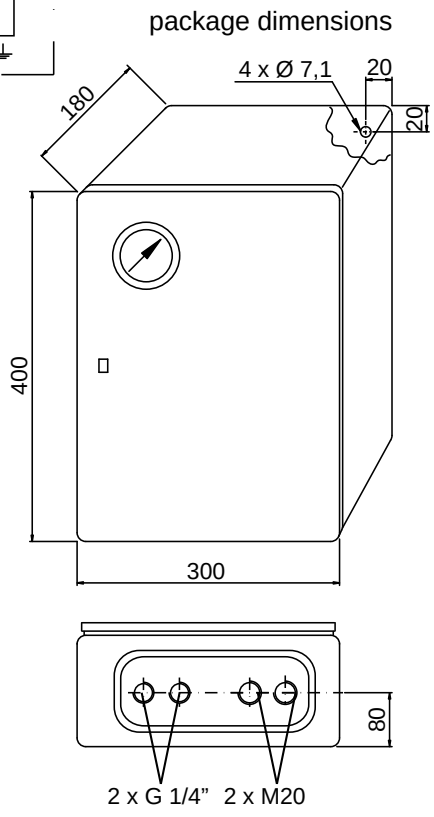

Item	Componenet	Part-No.
1	pressure switch – 0,5-10 bar	***14297***
2	manometer	***12785***
3	pressure regulation with filter oiler	***13986***
4	3/2-way-valve	***13311***

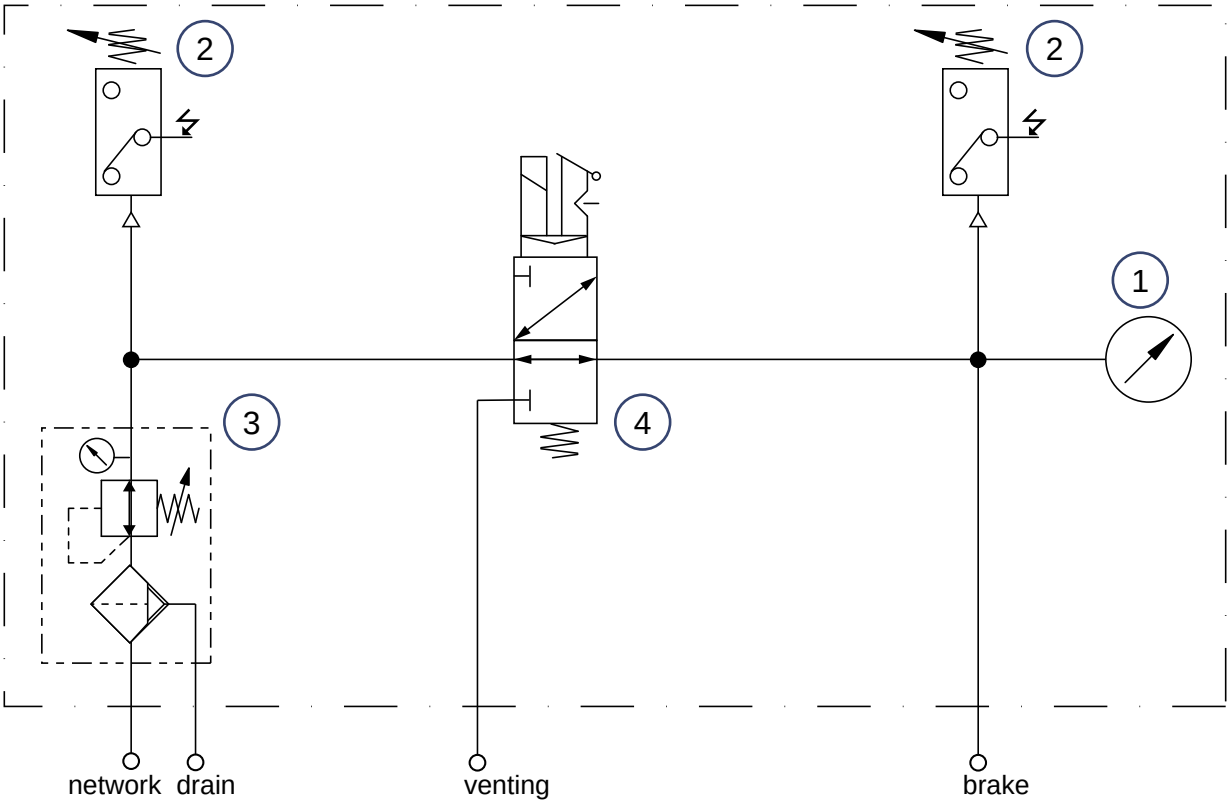

package dimensions

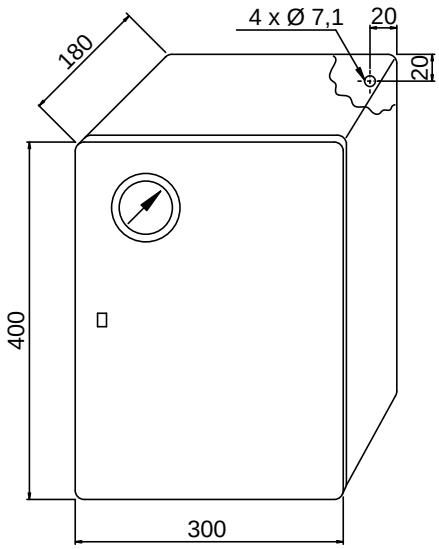

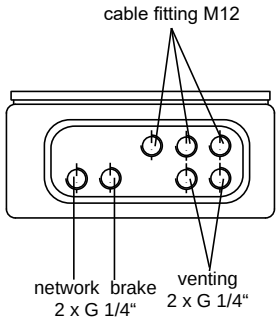

Item	Component	Part-No.
1	manometer	10195
2	pressure switch – 0,5 - 10 bar	10197
3	pressure regulation with filter oiler	13986
4	electromagnetic valve	10170

package dimensions

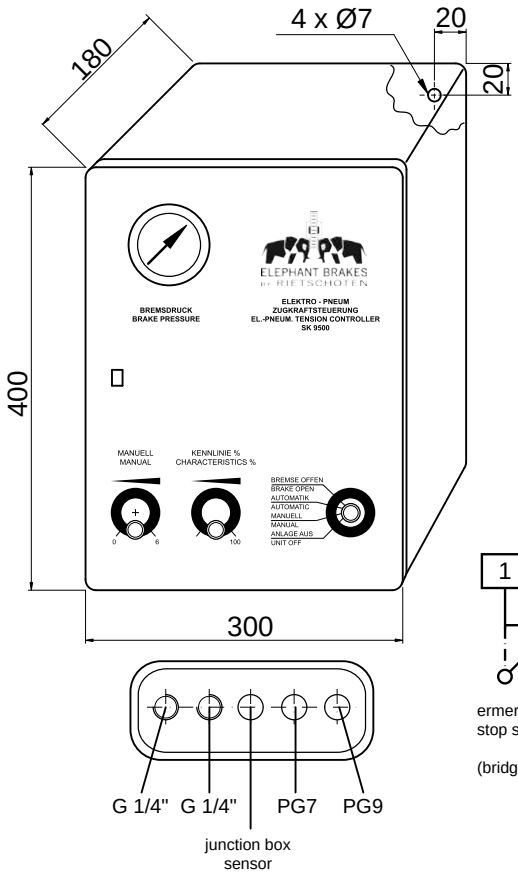

TECHNICAL DATA (standard – other on request):

Input: air pressure max. 6,5 bar (oil free air 50 µ or better)
Output: brake pressure 0 - 6 bar
Power supply: 230 VAC (+10 %) 50 / 60 Hz
Power consumption: 15 VA

ADDITIONAL FUNCTION:

- manual pressure control (switch position: manual)
- pressure regulator automatic
- emergency stop
- residual roll detection
- starting aid
- attenuator pads

terminal diagram

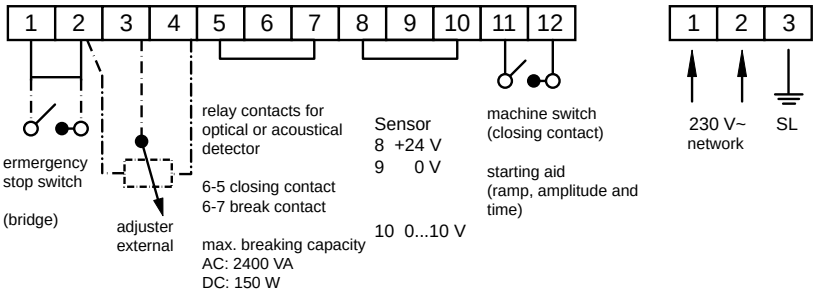

MODE OF OPERATION:

The electro-pneumatic tension control adjusts the operating pressure of pneumatically applied braking systems with decreasing reel diameter. An ultrasonic sensor detects the distance to the respective reel and sends a proportional signal to the tension controller.

The electro-pneumatic convertor converts this signal into a adequate pressure which is applied to the brakes, allowing for consistent tension of the material during the entire winding process.

The braking force can be adjusted between 25 and 100 % by means of an adjuster. By switching it is possible to connect a manual control voltage. Another option allows a brake bleeding.

Also integrated is a ramp starting function with adjustable time and amplitude, facilitated by a closing machine switch (functional or wiping contact) when activating the unit. With an uneven winding process, additional dampers can be switched on.

The device has an adjustable end pressure switch for the remaining roll. Furthermore, with the help of a potential-free changeover contact, the remaining role can be reported optically or acoustically.

Ultrasonic sensor

w/ analog output

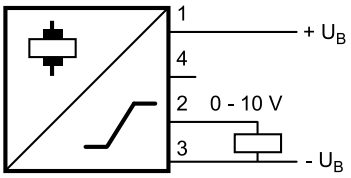

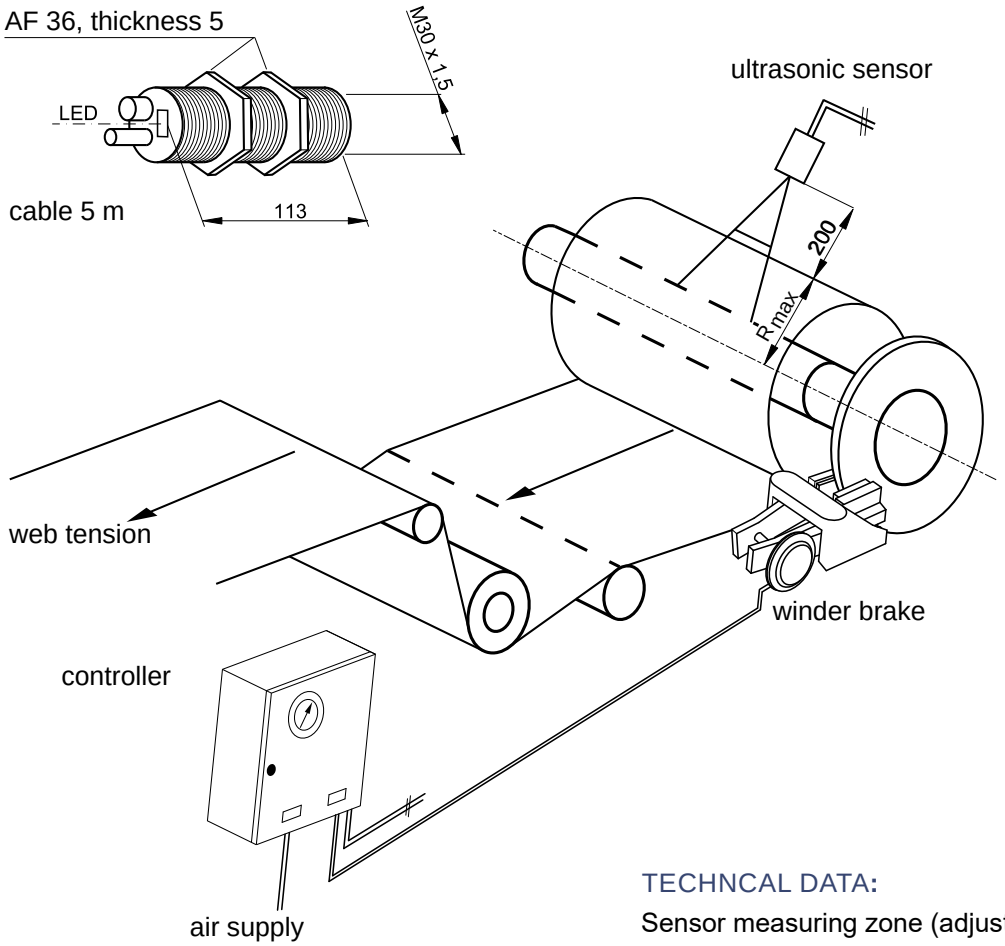

TECHNCAL DATA:

Sensor measuring zone (adjustable):

0,20 m - 2,00 m – ***Part-No.: 12511***

0,03 m - 0,50 m – ***Part-No.: 12633***

Aperture angle of the sound beam: ca. 5°

Linearity: ≤ 0,1 % of the terminal value

Converter frequency: 175 kHz

Analog signal output: 0...10 V

Protection type: IP 65

Ambient temperature: -25°C bis +70°C

accessories

Pedestal

for Brake Type R&H 250

PART NUMBERS

H = 248 mm: 10144

H to 300 mm: 10843

H to 600 mm: 10822

H to 800 mm: 10821

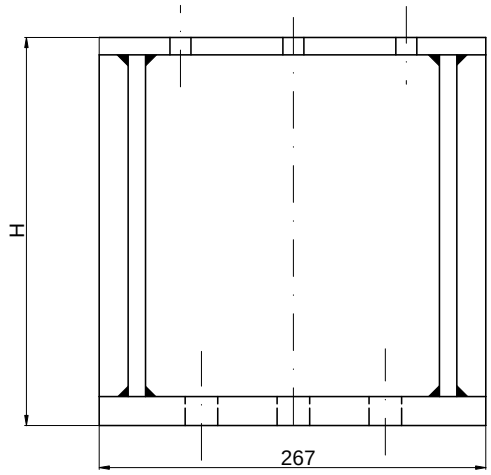

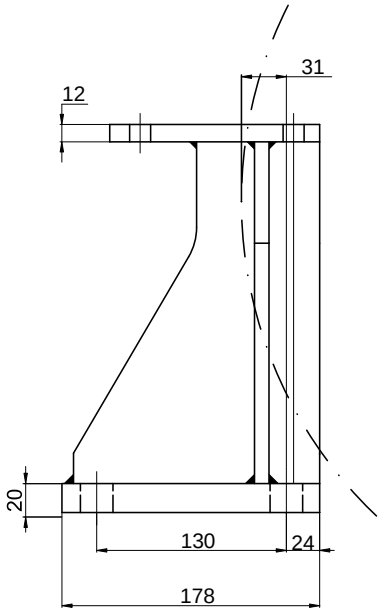

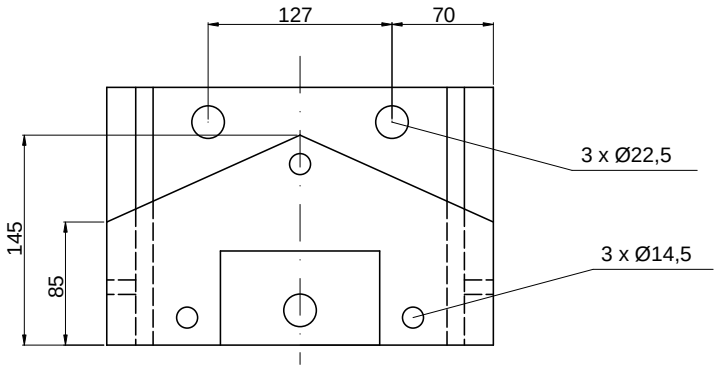

min. brake disc-Ø
610 mm

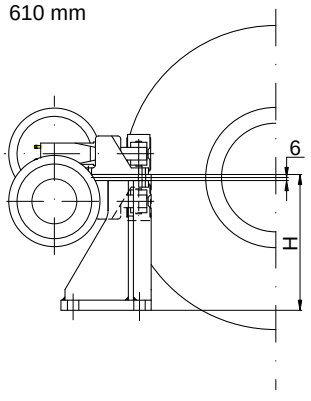

mounting examples

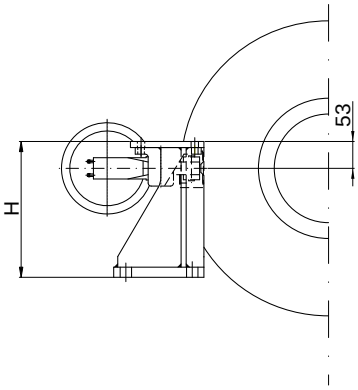

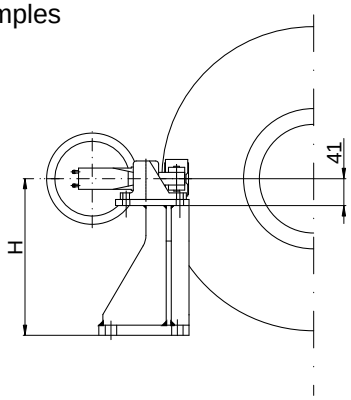

Pedestal

for Brake Type R&H 300

PART NUMBERS
H to 300 mm: 12686
H to 500 mm: 12687
H to 800 mm: 12688

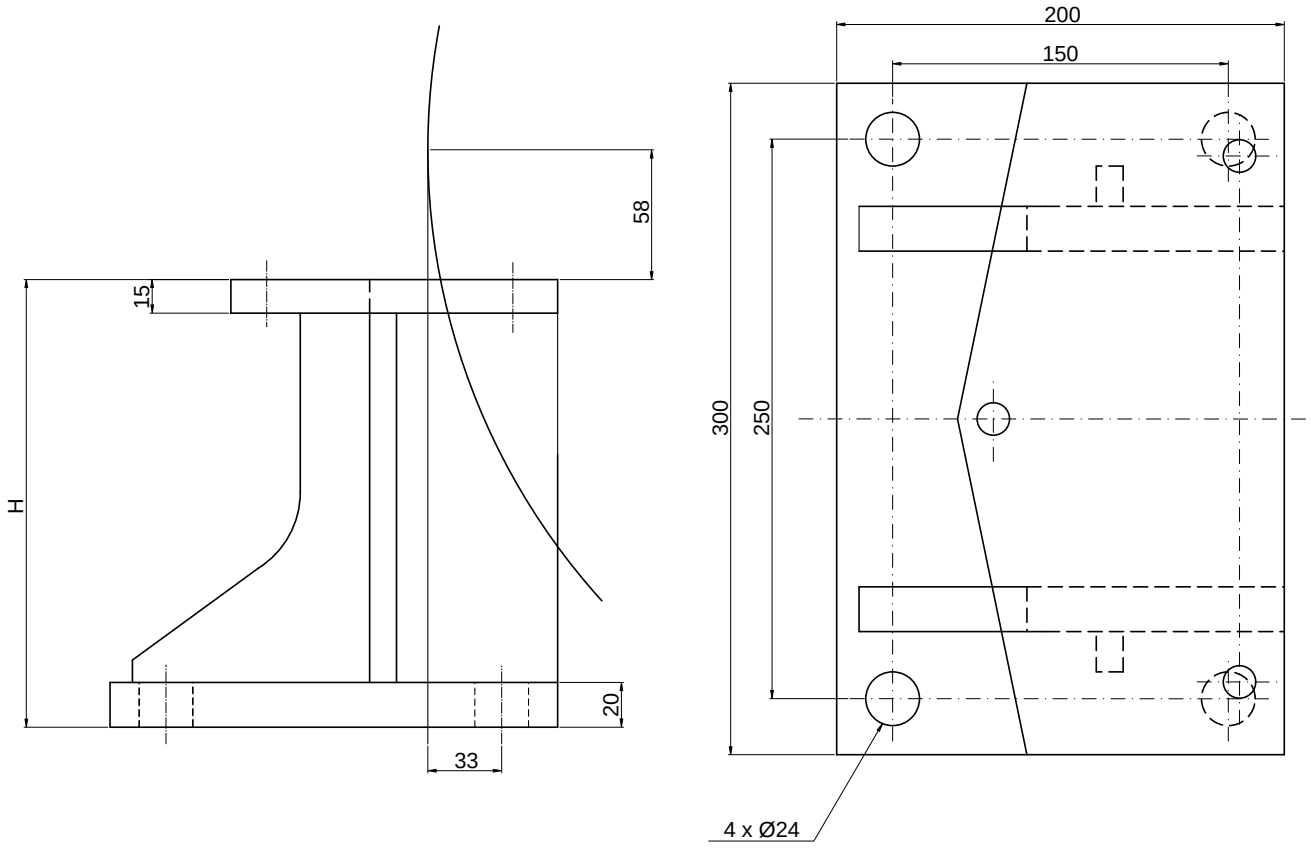

Pedestal

for Brake Type R&H 215 / R&H 230

PART NUMBERS

H to 300 mm: 11550

H to 500 mm: 11551

H to 800 mm: 11552

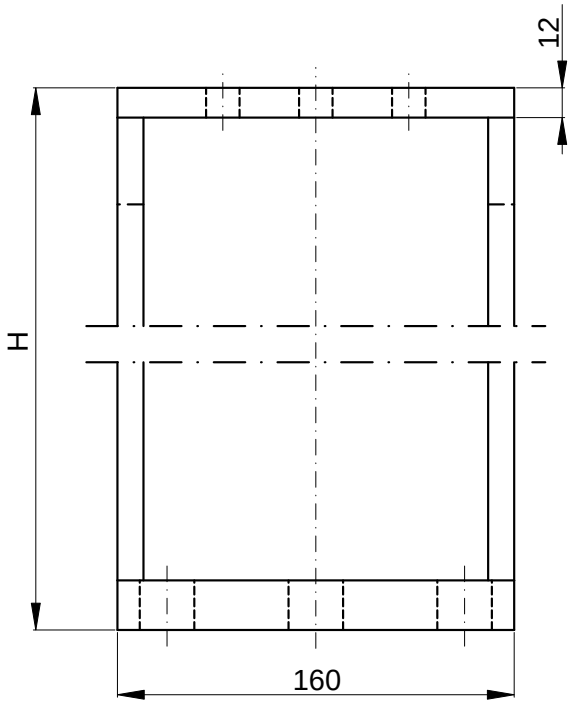

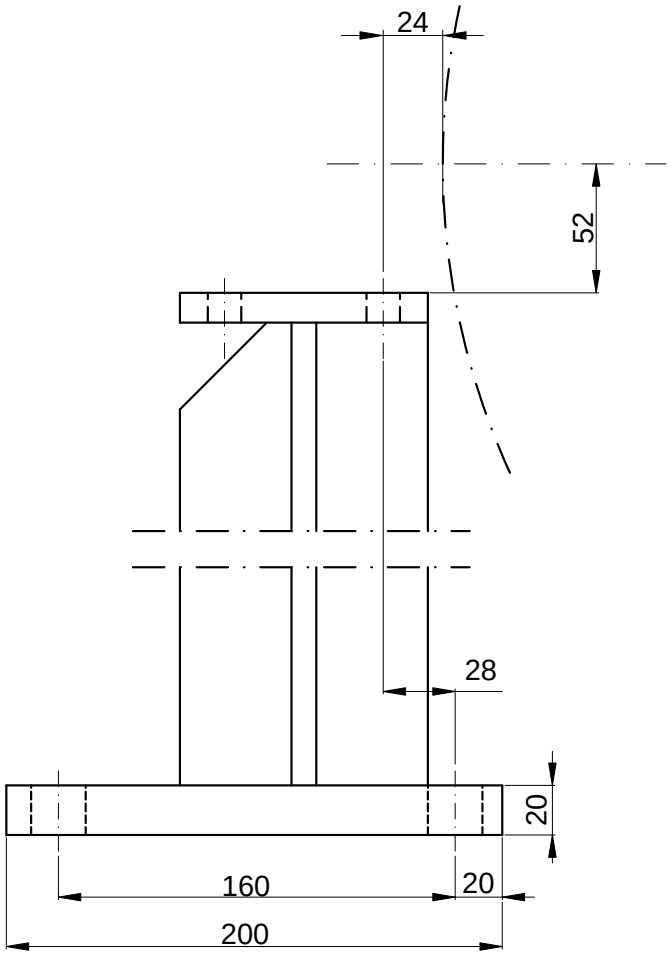

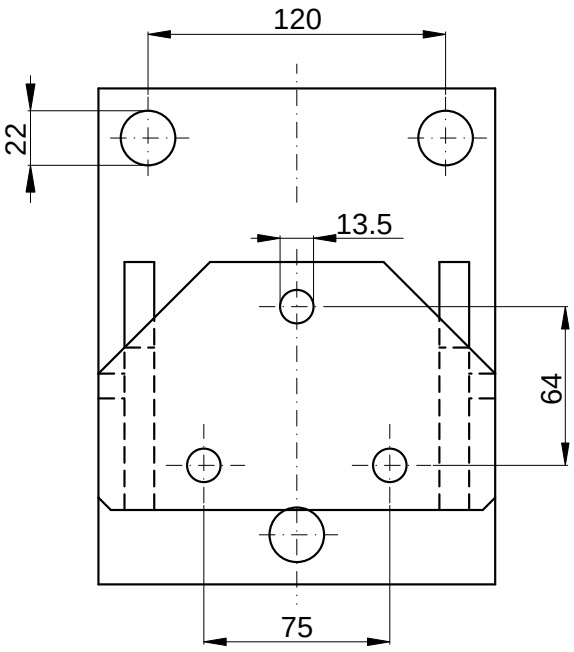

Pedestal

for Brake Type R&H 350

PART NUMBERS

H to 300 mm: 11475
H to 500 mm: 11544
H to 700 mm: 11545
H to 1000 mm: 12844
H to 1400 mm: 12845

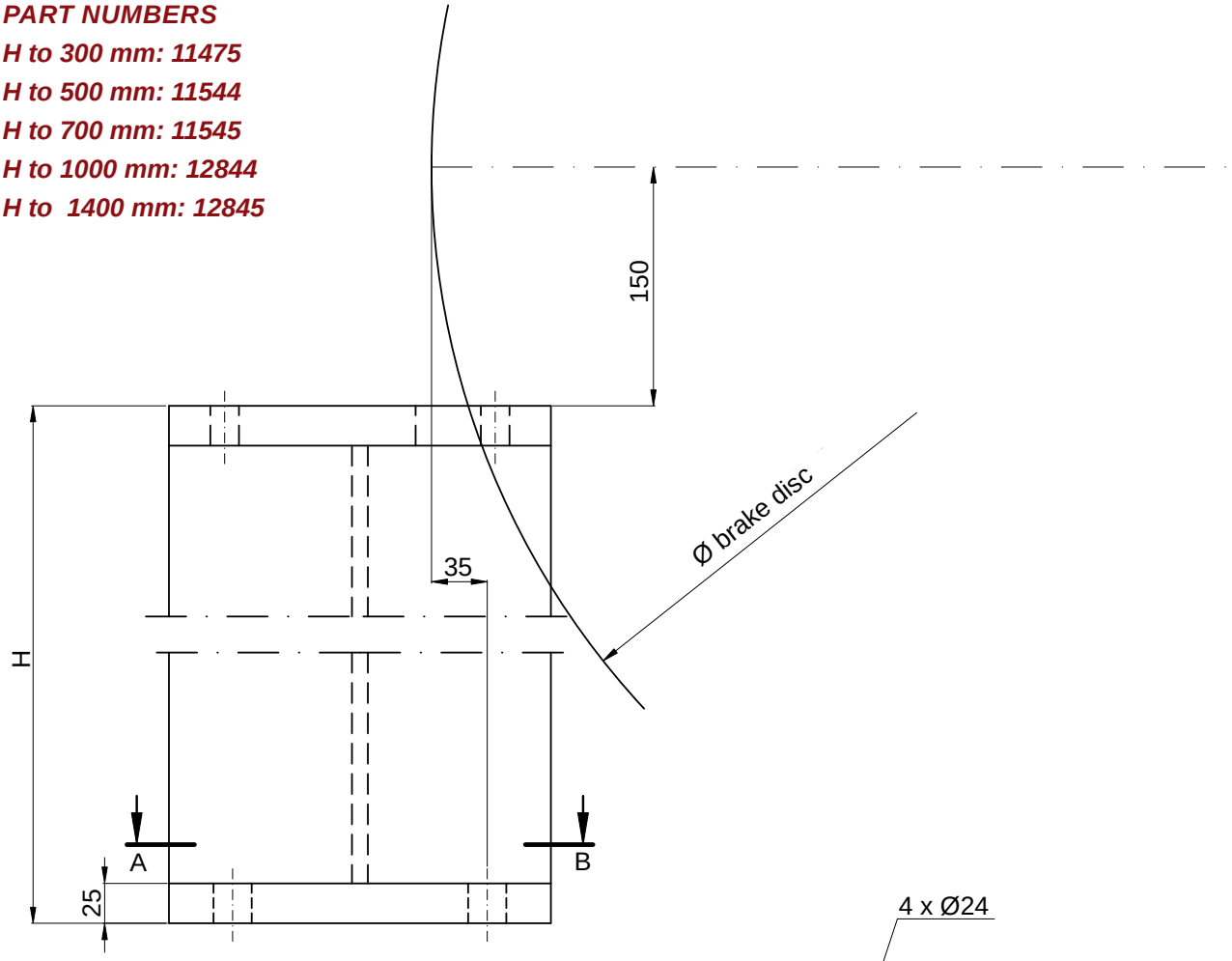

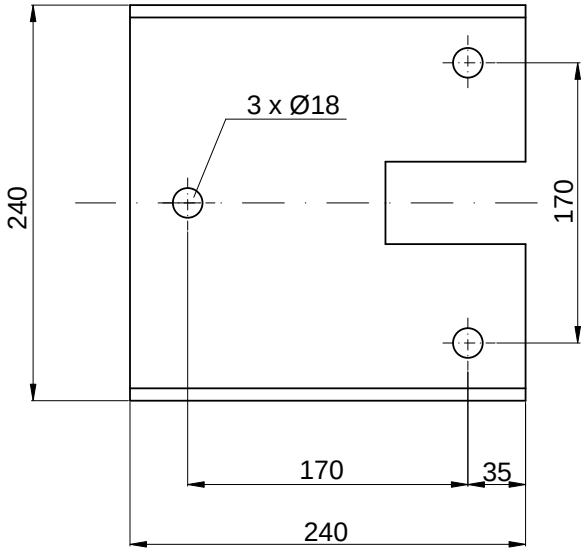

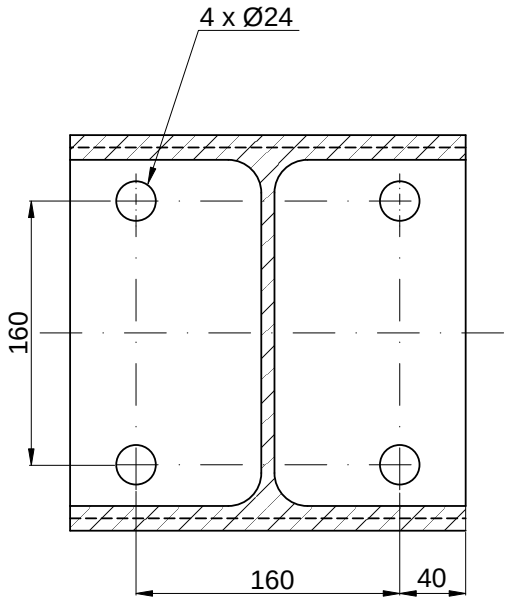

section A - B

Adjusting Screw

for Brake Type R&H 100

Part-No.: 11106

NOTE:
for non-horizontal installation

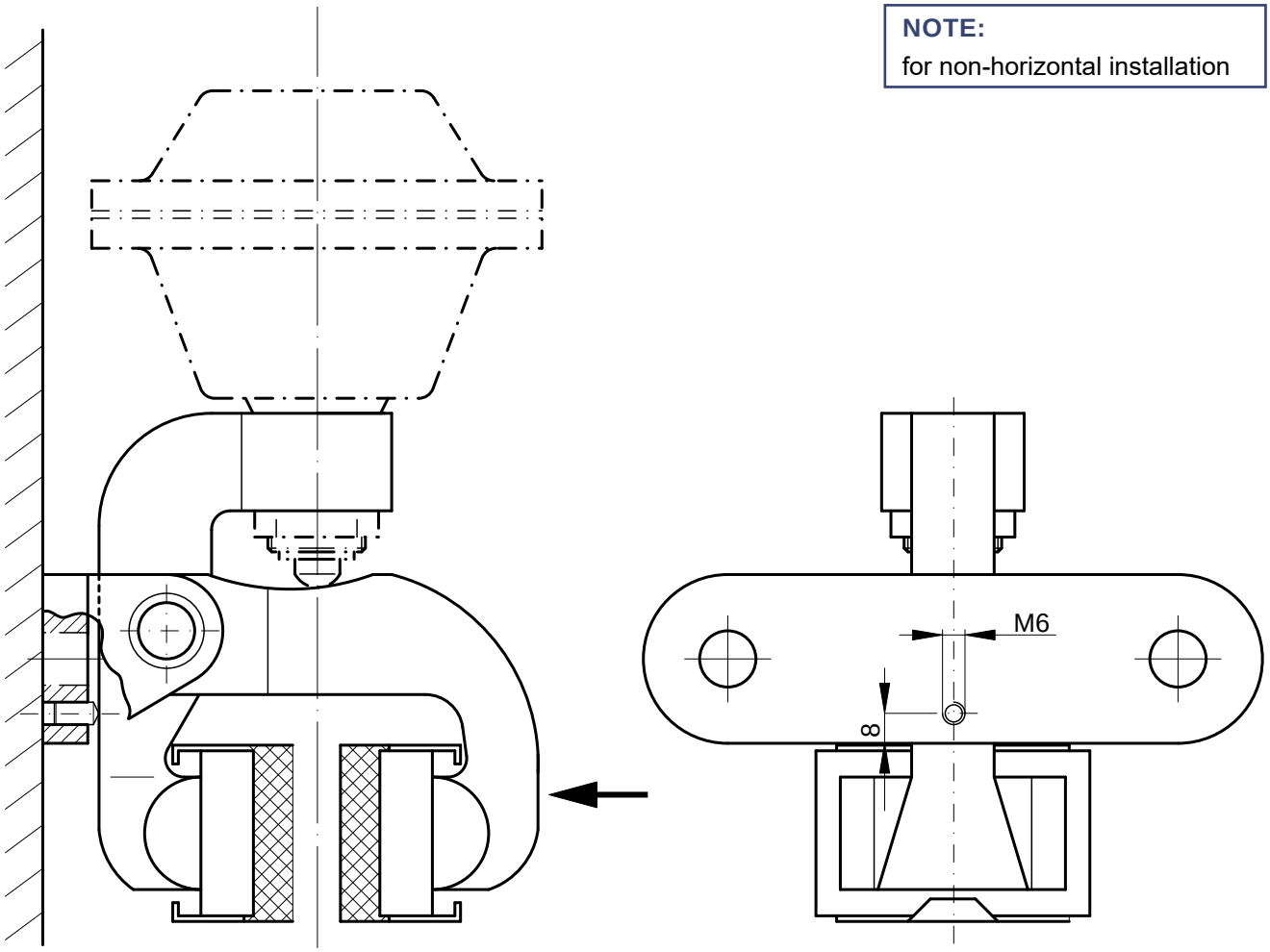

The brake caliper type R&H 100 is preferably mounted on a horizontal brake disc axis in the position 3 h or 9 h. In the case of a deviation from this installation position of more than 10° and in the case of vertical brake disc axis, it must be prevented that a brake pad is unintentionally pressed against the brake disc by the weight of the brake thruster.
Depending on the mounting direction and the resulting torque from the thruster weight, the brake caliper must be intercepted by the adjusting screw or the counter lever (see arrow).

! Secure the set screw M6 x 10 DIN 913 (Part-No. 11672) with Loctite after adjustment.

NOTE:
for non-horizontal installation

The R&H brake calipers are preferably mounted on a horizontal brake disc axis in the position 3 h or 9 h. In the case of a deviation from this installation position of more than 10° and in the case of vertical brake disc axis, it is absolutely necessary to use an inclined mounting kit. It prevents a brake pad from constantly coming in contact with the brake disc as a result of the brake caliper‘s asymmetry.

For a vertical brake disc axis choose an installation position where the thruster is positioned as far as possible above the brake caliper.
In the case of an arrangement with a „downward thruster“, the use of additional return springs may be required due to the mass of the thruster.

R&H 200 – *Part-No. 11296*

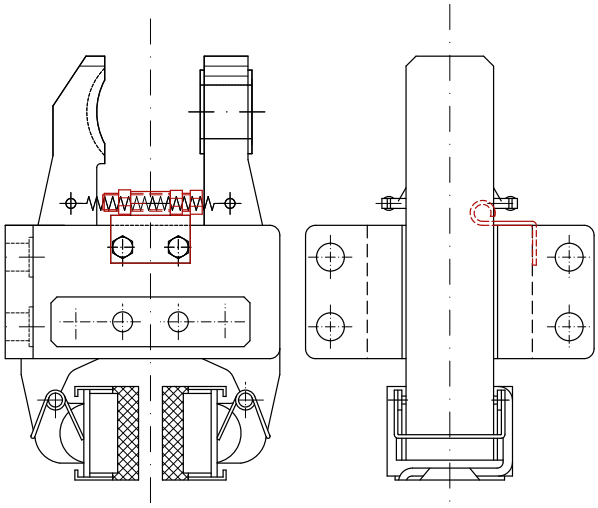

R&H 215 - 245 – *Part-No. 10087*

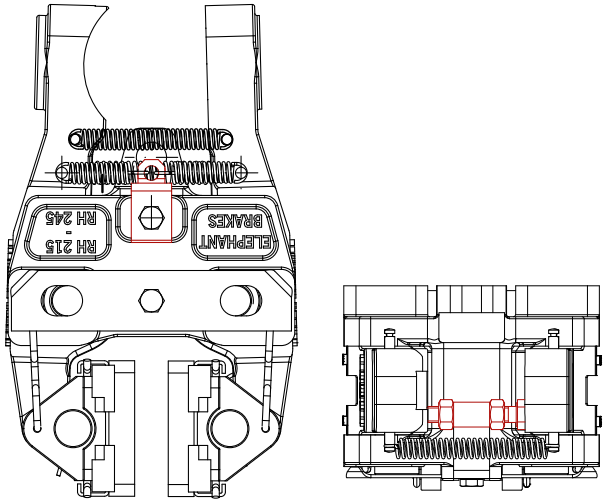

R&H 250 / R&H 300 – *Part-No. 13109*

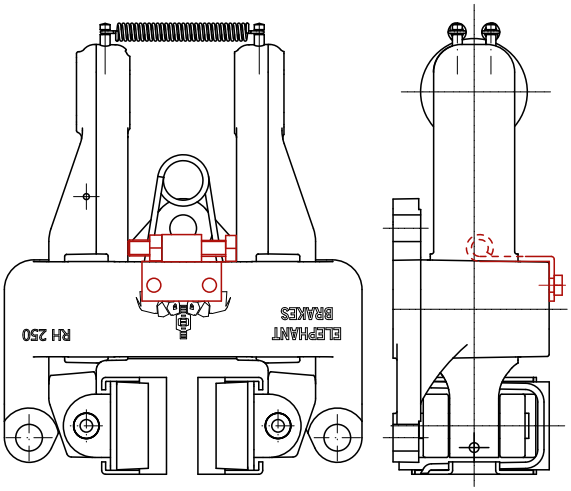

R&H 350 – *Part-No. 10379 or 14641*

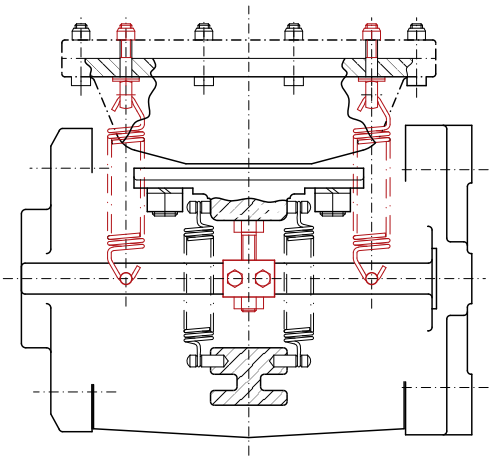

NOTE:
More hydraulic units on request.

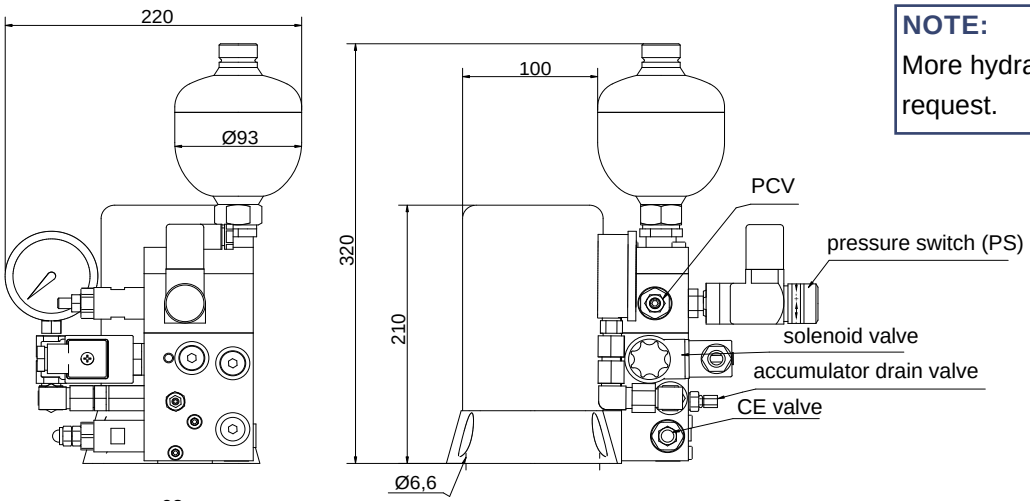

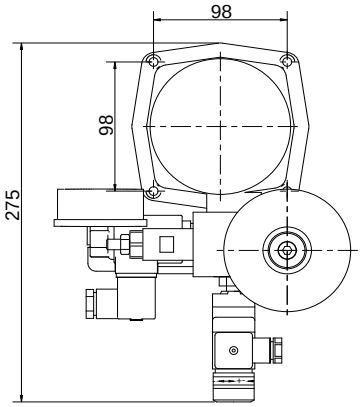

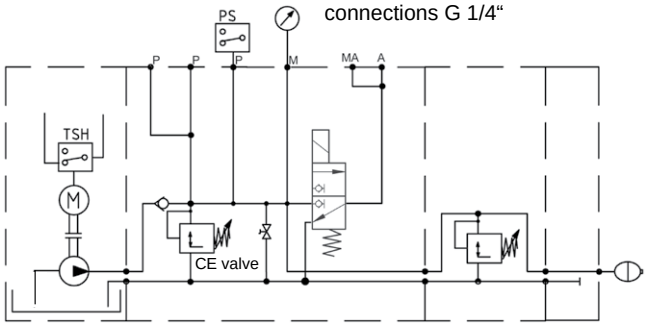

Displacement: 1,25 l/min
Nominal pressure: adjustable up to 160 bar
Filling volume: 1,1 l
Supply voltage: 380-420 VAC 50Hz//440-480 VAC 60 Hz
Type of protection: DIN 40050 - IP 54, w/ completely mounted unit
Type of connection: Cable – 1,5 m
Solenoid valve voltage: 24 VDC standard, by request 230 VAC 50 Hz // 120 VAC 60 Hz
$P_{Agg.}$: 0,28kW, cos φ = 0,72
$I_{Nenn.}$: 1,5 A
P_{Vent}: 26 W
Mode of operation: Temporary duty S2, intermittent duty S3 acc. to VDE 0530
Mass (w/o oil): HP0... 12,2 kg
Installation position: vertical, breather and connecting cable on top
Direction of rotation: at will
Ambient temperature: -20°C to +40°C
Mounting: Mounting holes on the unit base for M6 screws
Hydraulic fluid: Hydraulik oil acc. to DIN 51524 HLP or HLPD
Pressure temperature range: -20°C up to +80°C
Only use filtered hydraulic oil 25µm absolut.

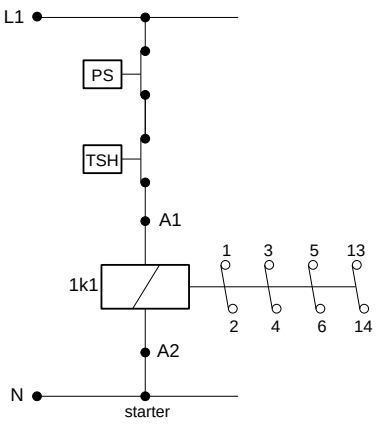

For reasons of thermal load, units of the HP series may only be used in temporary intermittent duty.

Compressor unit

Classic Mini 210 / 10 W

Part-No.: 10753

NOTE:
Replacement for type
Eco-Mini since 04.‘07

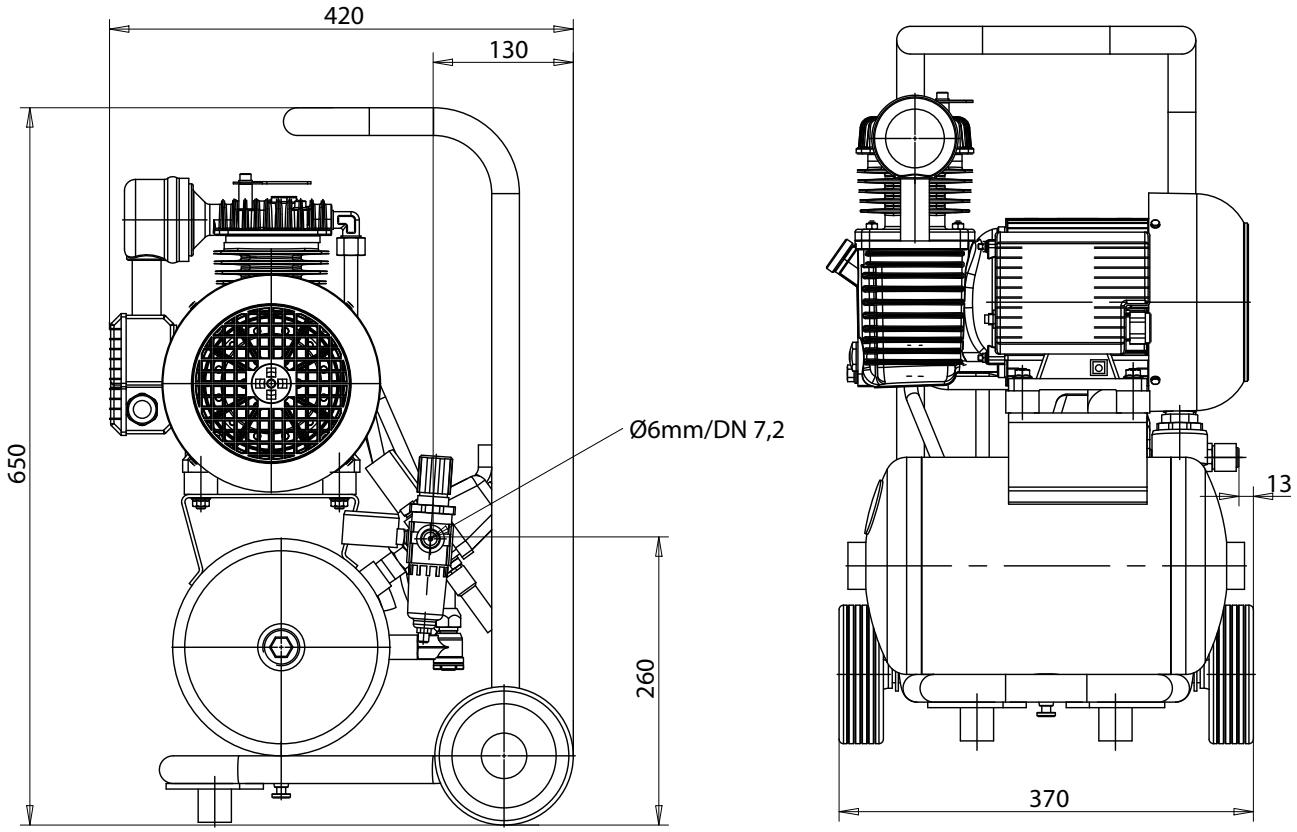

Technical data

Inlet capacity: 210 l/min
Filling volume: 140 l/min
Max. pressure: 10 bar
Electrical connection (50 Hz): 230 V AC
Motor power: 1,5 kW
Hose connection: 6 mm
Mass: 29 kg
Tank volume: 10 l
Sound pressure level: 67 dB(A)
Duty cycle: 60 %

Bigger units deliverable by request

Equipment

- Inlet filter with damper
- Manometer
- Safety valve
- Check valve
- Self-stopping hose coupling with plug-in sleeve
- Inside plastic-coated vessel
- Vessel drain cock
- Pressure switch for automatic operation
- Motor protection switch, mounted
- 3 m connection cable

DEUTSCHE
VAN RIETSCHOTEN
& HOUWENS GMBH
Siemensstrasse 47
25462 Rellingen

Phone: 0511 - 37207-0
Fax: 0511 - 37207-77
contact@elephantbrakes.com
www.elephantbrakes.com

This catalogue does not contain any warranties or quality commitments, whether tacit or explicit, on the part of the respective company with respect to its products. Nor does it contain any guarantees as regards the topicality, correctness, integrity and quality of the information provided herein or with the respect to product availability.
The information in this publication and the products and services described herein are subject to change or updating at any time without prior notice on the part of the respective company.

Erfahren Sie mehr über unsere Firma

www.rietschoten.de
oder **QR-Code scannen**

ELEPHANT BRAKES
BY RIETSCHOTEN

Your contact: